STEEL WATERLINE REPLACEMENT PROJECT
CITY OF ARCATA, ENGINEERING DEPT.

CALIFORNIA MAP

HUMBOLDT COUNTY MAP

PROJECT NOTES	
OWNER	CITY OF ARCATA
ZONING	INLAND: ARCATA LAND USE CODE (LUC)
GENERAL PLAN DESIGNATION	PUBLIC FACILITY

BASIS OF BEARINGS FOR SURVEY	
HORIZONTAL BASIS	CA STATE PLANE COORDINATE SYSTEM (CCS83),
VERTICAL BASIS	CA STATE PLANE COORDINATE SYSTEM (CCS83),
FOR ADDITIONAL INFORMATION PLEASE CONTACT CITY PERSONNEL.	

SHEET INDEX	
G-001	COVER SHEET
G-002-G-004	SHEET LAYOUT(S)
G-005	NOTES
C-101 - C-120	IMPROVEMENT PLANS
C-501 - C-505	DETAILS

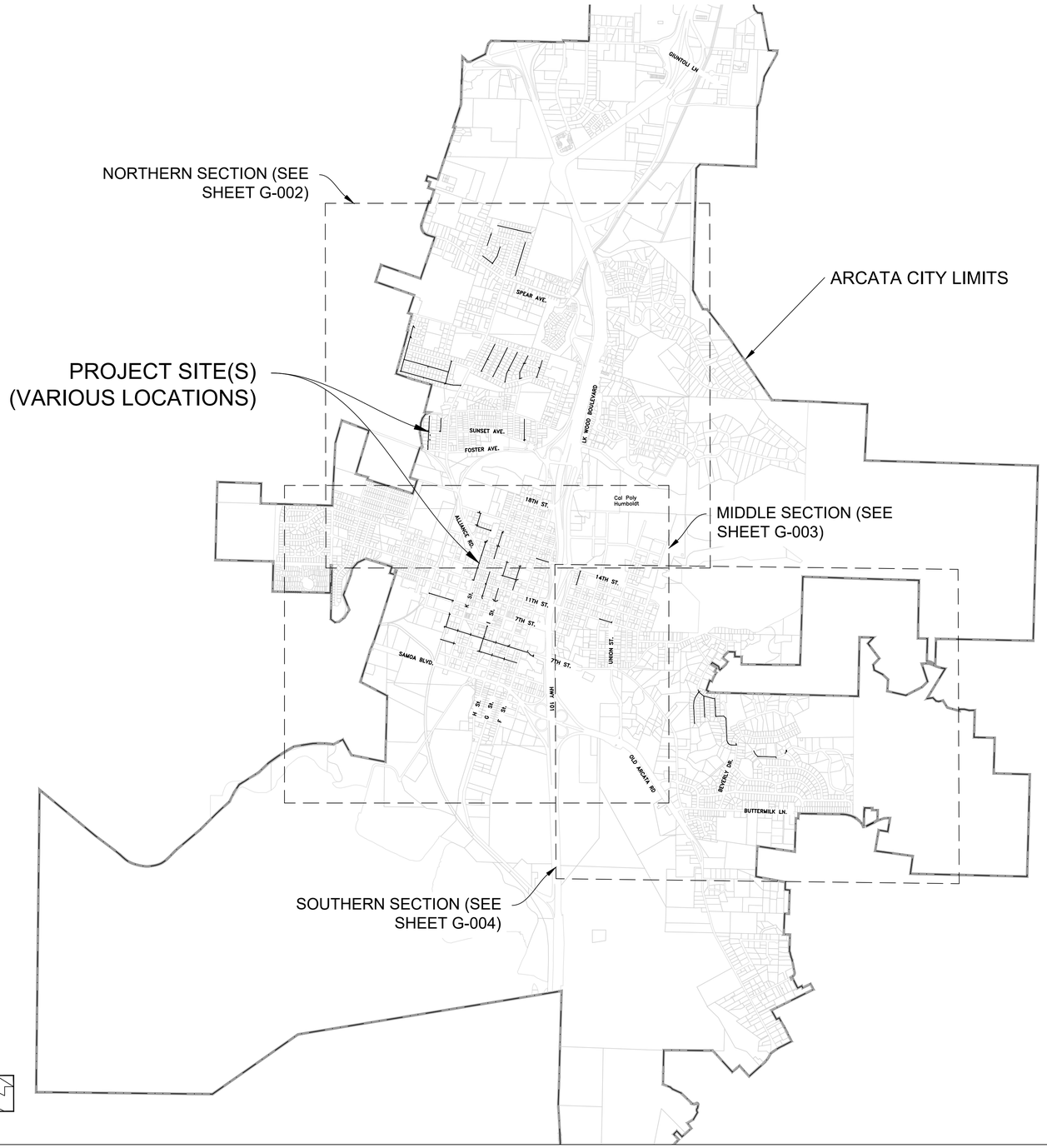

REGISTERED PROFESSIONAL ENGINEER DAVID F. CAISSE No. C30862 CIVIL STATE OF CALIFORNIA

REGISTERED PROFESSIONAL ENGINEER NETRA KHATRI 75428 CIVIL STATE OF CALIFORNIA

City of ARCATA

Sheet Title: COVER SHEET

Project Name: STEEL WATERLINE REPLACEMENT PROJECT

Project Address: VARIOUS LOCATIONS

Designed By	JONATHAN A. KIRCHUBEL
Drawn By	JONATHAN A. KIRCHUBEL
Checked By	DAVID CAISSE
Approved By	NETRA B. KHATRI

Date: JANUARY 2025	Sheet: G-001
Scale: 1"=750'	Page: 1

Sheet Title
SHEET LAYOUT – NORTHERN SECTION

Project Name
STEEL WATERLINE REPLACEMENT PROJECT

Project Address
VARIOUS LOCATIONS

Designed By	JONATHAN A. KIRCHUBEL
Drawn By	JONATHAN A. KIRCHUBEL
Checked By	DAVID CAISSE
Approved By	NETRA B. KHATRI

Date: JANUARY 2025	Sheet: G–002
Scale: 1"=500'	Page: 2

REGISTERED PROFESSIONAL ENGINEER
No. C63962
CIVIL
STATE OF CALIFORNIA

REGISTERED PROFESSIONAL ENGINEER
NETRA KHATRI
75428
CIVIL
STATE OF CALIFORNIA

City of ARCATA

Sheet Title
SHEET LAYOUT – MIDDLE SECTION

Project Name
STEEL WATERLINE REPLACEMENT PROJECT

Project Address
VARIOUS LOCATIONS

Designed By	JONATHAN A. KIRCHUBEL
Drawn By	JONATHAN A. KIRCHUBEL
Checked By	DAVID CAISSE
Approved By	NETRA B. KHATRI

Date: JANUARY 2025	Sheet: G–003
Scale: 1"=300'	Page: 3

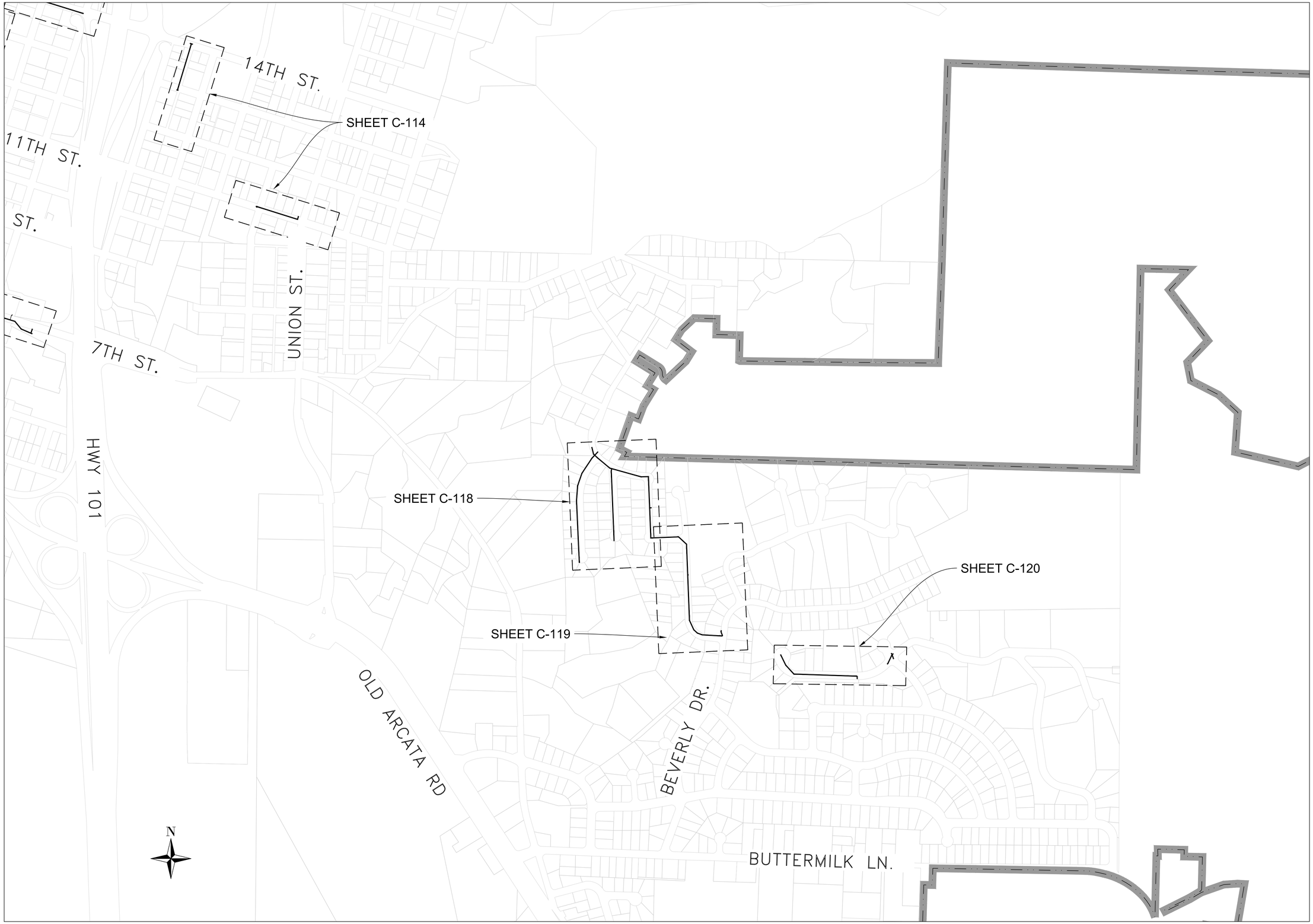

REGISTERED PROFESSIONAL ENGINEER
No. C80962
CIVIL
STATE OF CALIFORNIA

REGISTERED PROFESSIONAL ENGINEER
NETRA KHATRI
75428
CIVIL
STATE OF CALIFORNIA

City of ARCATA

Sheet Title
SHEET LAYOUT – SOUTHERN SECTION

Project Name
STEEL WATERLINE REPLACEMENT PROJECT

Project Address
VARIOUS LOCATIONS

Designed By	JONATHAN A. KIRCHUBEL
Drawn By	JONATHAN A. KIRCHUBEL
Checked By	DAVID CAISSE
Approved By	NETRA B. KHATRI

Date: JANUARY 2025	Sheet: G–004
Scale: 1"=300'	Page: 4

PROJECT INFORMATION:

THIS PROJECT CONSISTS OF REMOVAL AND REPLACEMENT OF WATER MAINLINES AND SERVICES AS SHOWN ON THESE PLANS AND CALLED:

STEEL WATERLINE REPLACEMENT PROJECT

THE CONTRACTOR IS HEREBY NOTIFIED THAT HISTORICAL INFORMATION REGARDING THE PROJECT SITE EXISTS AND IS AVAILABLE FOR PUBLIC INSPECTION IN THE CITY OF ARCATA'S ENGINEERING DEPARTMENT OFFICES. THIS HISTORICAL INFORMATION MAY INCLUDE THE FOLLOWING:

- MISCELLANEOUS UTILITY MAPS AND PLANS
- CITY OF ARCATA BLOCK MAPS
- CITY OF ARCATA WATER MAPS
- CITY OF ARCATA DRAINAGE MAPS

THE ANTICIPATED ORDER OF CONSTRUCTION FOR THIS PROJECT IS AS FOLLOWS:

a. NOTIFY ALL RESIDENTS AND BUSINESS OWNERS OF ANY WORK ADJACENT TO PROPERTIES WITHIN 48 HOURS OF WORK OCCURRING.

b. PROVIDE TEMPORARY WATER SERVICE TO THOSE INTERRUPTED BY WORK OCCURRING TO FACILITATE THIS PROJECT.

c. REMOVE AND REPLACE WATER MAINLINES AND SERVICES.

d. SUCCESSFUL CHLORINATION AND BACTERIAL TESTING PER AMERICAN WATERWORKS ASSOCIATION (AWWA) STANDARDS.

ABBREVIATIONS

AB	– AGGREGATE BASE	O.C.	– ON CENTER
AC	– ASPHALT CONCRETE	OD	– OUTSIDE DIAMETER
ACP	– ASBESTOS CEMENT PIPE	PCC	– PORTLAND CEMENT CONCRETE
BOT	– BOTTOM	PL	– PROPERTY LINE
BOTW	– BOTTOM WALL	PP	– POWER POLE
BW	– BACK OF WALK	PSF	– POUNDS PER SQUARE FOOT
C&G	– CURB AND GUTTER	PSI	– POUNDS PER SQUARE INCH
CL	– CENTER LINE	PSIG	– POUNDS PER SQUARE INCH GAGE
CO	– CLEANOUT	PVC	– POLYVINYL CHLORIDE PLASTIC
CONC	– CONCRETE	PVMT	– PAVEMENT
CY	– CUBIC YARD	PVT	– PRIVATE
DI	– DRAIN INLET	QTY	– QUANTITY
DIAM	– DIAMETER	R	– RADIUS
DIM	– DIMENSION	RC	– RELATIVE COMPACTION
DTL	– DETAIL	RCP	– REINFORCED CONCRETE PIPE
(E)	– EXISTING	REQD	– REQUIRED
ELEC	– ELECTRICAL	R.O.W.	– RIGHT OF WAY
ELEV	– ELEVATION	RT	– RIGHT
ENGR	– ENGINEER	SD	– STORM DRAIN
EP	– EDGE OF PAVEMENT	SDMH	– STORM DRAIN MANHOLE
FC	– FACE OF CURB	SECT	– SECTION
FG	– FINISHED GRADE	SL	– SLOPE
FH	– FIRE HYDRANT	SHT	– SHEET
FL	– FLOWLINE	SPEC	– SPECIFICATION
G	– GAS	SQ	– SQUARE
GPM	– GALLONS PER MINUTE	SQFT	– SQUARE FEET
GV	– GATE VALVE	SS	– SANITARY SEWER
HDPE	– HIGH DENSITY POLYETHYLENE PIPE	SSMH	– SANITARY SEWER MANHOLE
HT	– HEIGHT	STA	– STATION
HZ	– HORIZONTAL	STD	– STANDARD
ID	– INNER DIAMETER	STL	– STEEL
IN	– INCH	SW	– SIDEWALK
JP	– JUNCTION POLE	SYMM	– SYMMETRICAL
KW	– KILOWATT	TEMP	– TEMPORARY
LB	– POUND	TG	– TOP OF GRATE
LF	– LINEAR FEET	TOW	– TOP OF WALL
MATL	– MATERIAL	(TYP)	– TYPICAL
MAX	– MAXIMUM	UG	– UNDERGROUND
MECH	– MECHANICAL	UP	– UTILITY POLE
MH	– MANHOLE	UTIL	– UTILITY
MIN	– MINIMUM	V	– VOLT
MISC	– MISCELLANEOUS	VCP	– VITRIFIED CLAY PIPE
MJ	– MECHANICAL JOINT	W	– WATERLINE
(N)	– NEW	WM	– WATER METER
NO.	– NUMBER	WV	– WATER VALVE
NTS	– NOT TO SCALE	YD	– YARD

LEGEND

	STATION LINE		MANHOLE
	<E> EDGE OF PAVEMENT & DIRT		STORM DRAIN INLETS
SS	SANITARY SEWER LINE		UTILITY POLE
SD	STORM DRAIN LINE		SIGN & POST
W	WATER LINE		SEWER CLEANOUT
GAS	GAS LINE	WM	WATER METER BOX
A	WATER LINE TO BE ABANDONED		WATER VALVE
X	WATER LINE TO BE REMOVED		FIRE HYDRANT
	SURFACE DRAINAGE DIRECTION		MONUMENT
	ADA RAMP SLOPE MARKING		FLANGE
	STREET LIGHT		ELBOW
	(N – NEW, R – REMOVE, A – ABANDON)		45 DEGREE BEND
	LENGTH OF PIPE, LINEAR–FOOT		TEE
	PIPE DIAMETER, INCHES		CROSS
	MATERIAL TYPE		REDUCER
			GATE VALVE WITH MECHANICAL JOINT
			CAP LINE

GENERAL NOTES:

1. IT IS THE RESPONSIBILITY OF THE CONTRACTOR TO THOROUGHLY EXAMINE THE JOB SITE, THE CONTRACT SPECIFICATIONS, AND THESE PLANS PRIOR TO SUBMITTING THEIR BID. NO ADDITIONAL PAYMENT SHALL BE MADE BY THE CITY FOR ANY EXPENSE THE CONTRACTOR MAY INCUR AS A RESULT OF THEIR FAILURE TO ADEQUATELY ACQUAINT THEMSELVES WITH THE EXTENT OF THE WORK TO BE DONE, THE GENERAL SITE CONDITIONS, OR THE REQUIREMENTS OF THE PLANS, CONTRACT DOCUMENTS, GENERAL PROVISIONS, SPECIAL PROVISIONS, AND REFERENCED SPECIFICATIONS.
2. THE CONTRACTOR SHALL POSSESS A CLASS 'A' (GENERAL ENGINEERING) CONTRACTOR'S LICENSE, AS WELL AS A CITY OF ARCATA BUSINESS LICENSE, AT THE TIME THE CONTRACT IS AWARDED. ANY SUBCONTRACTOR SHALL HAVE THE APPROPRIATE LICENSE FOR THE WORK BEING PERFORMED.
3. IF THE CONTRACTOR WISHES TO USE WATER FROM THE CITY OF ARCATA WATER DISTRIBUTION SYSTEM DURING THE COURSE OF THIS PROJECT, THEY SHALL OBTAIN AND ATTACH A DOUBLE CHECK VALVE AT THE POINT WHERE THEY CONNECTS TO THE CITY WATER SYSTEM (I.E. AT A HYDRANT, WATER SERVICE, BLOW-OFF, ETC.). THE DOUBLE CHECK VALVE SHALL BE TESTED AND CERTIFIED BY EITHER A CERTIFIED TESTER OR THE CITY OF ARCATA AND APPROVED BY THE ENGINEER PRIOR TO USE. THE CONTRACTOR SHALL BE RESPONSIBLE FOR THE MAINTENANCE AND PROTECTION OF THE DOUBLE CHECK VALVE.
4. THE CONTRACTOR SHALL NOT USE THE PUBLIC RIGHT-OF-WAY FOR LONG TERM STAGING OR MATERIAL STORAGE. DURING THE WORK DAY, THE CONTRACTOR MAY USE THE WORK AREA FOR STORAGE OF PROJECT MATERIALS AND EQUIPMENT THAT WILL BE USED THAT DAY; HOWEVER, AT THE END OF THE DAY, THE WORK SITE SHALL BE CLEANED TO THE SATISFACTION OF THE ENGINEER.
5. THIS IS A PREVAILING WAGE PROJECT.
6. THE CONTRACTOR SHALL SECURE THE CONSTRUCTION SITE DURING NON-WORKING HOURS AS APPROVED BY THE ENGINEER.
7. THE CONTRACTOR SHALL SUBMIT TO THE ENGINEER FOR REVIEW A MINIMUM OF FOUR (4) COPIES OF THE MANUFACTURERS' PRODUCT INFORMATION CUT SHEETS INDICATING DIMENSIONS FOR ALL MANUFACTURED AND PRECAST ITEMS PROPOSED FOR USE. THE CITY WILL KEEP THREE (3) COPIES AND RETURN THE REMAINING COPIES TO THE CONTRACTOR AFTER APPROVAL.
8. ALL MATERIALS AND EQUIPMENT SHALL BE INSTALLED PER MANUFACTURERS' RECOMMENDATIONS.
9. ALL GRADES SHOWN ON THE PLANS SHALL BE SUBJECT TO ADJUSTMENT IN THE FIELD BY THE ENGINEER.
10. THE CONTRACTOR SHALL SUBMIT A PROPOSED CONSTRUCTION SCHEDULE TO THE ENGINEER AT OR PRIOR TO THE PRECONSTRUCTION MEETING SHOWING THE ORDER IN WHICH THEY INTEND TO CONSTRUCT ALL PORTIONS OF THIS PROJECT. THE ENGINEER SHALL PROVIDE EITHER APPROVAL OF THE CONTRACTOR'S SCHEDULE OR A LIST OF PROPOSED CHANGES TO THE SCHEDULE PRIOR TO CONSTRUCTION, AND THE CONTRACTOR SHALL ABIDE BY THAT APPROVED SCHEDULE THROUGHOUT THE COURSE OF THE PROJECT UNLESS OTHERWISE DIRECTED BY THE ENGINEER.
11. SEVERAL ITEMS OF WORK SHOWN ON THESE PLANS MUST BE COMPLETED IN A SINGLE DAY. THE CONTRACTOR SHALL TAKE THIS REQUIREMENT INTO ACCOUNT WHEN PREPARING THEIR BID AND THEIR WORK PLAN TO ENSURE THAT A SUFFICIENT AMOUNT OF PERSONNEL AND EQUIPMENT ARE ONSITE AND AVAILABLE TO ALLOW THE WORK TO BE COMPLETED AS REQUIRED.
12. ALL WORKMANSHIP AND MATERIALS SHALL CONFORM TO THE CURRENT VERSION OF THE STATE OF CALIFORNIA DEPARTMENT OF TRANSPORTATION (CALTRANS) STANDARD PLANS & SPECIFICATIONS, AND THE CONTRACT SPECIAL PROVISIONS FOR THIS PROJECT, UNLESS SHOWN OTHERWISE.
13. QUANTITIES OF ITEMS, LENGTH OF PROJECT, AND SITE CONDITIONS SHOWN IN THE PLANS ARE APPROXIMATE. ALL MATERIALS SHALL BE FURNISHED AND INSTALLED BY THE CONTRACTOR UNLESS OTHERWISE NOTED.
14. CONTRACTOR AGREES TO ASSUME SOLE AND COMPLETE RESPONSIBILITY FOR THE JOB SITE DURING THE COURSE OF CONSTRUCTION OF THIS PROJECT, INCLUDING SAFETY OF ALL PERSONS AND PROPERTY; THAT THIS REQUIREMENT SHALL APPLY CONTINUOUSLY AND NOT BE LIMITED TO NORMAL WORKING HOURS; AND THAT THE CONTRACTOR SHALL DEFEND, INDEMNIFY, AND HOLD THE CITY AND THEIR REPRESENTATIVES HARMLESS FROM ANY AND ALL LIABILITY, REAL AND/OR ALLEGED, IN CONJUNCTION WITH THE PERFORMANCE OF THIS PROJECT.
15. CONTRACTOR SHALL BE HELD RESPONSIBLE FOR ANY AND ALL DAMAGES TO EXISTING STRUCTURES, ROADS, RAILROAD TRACK AND TRACK BED, AND UTILITIES DURING CONSTRUCTION. ALL DAMAGE SHALL SHALL BE RESTORED TO EQUAL OR BETTER CONDITION AT THE CONTRACTOR'S EXPENSE.
16. A SET OF SIGNED WORKING DRAWINGS AND A SET OF SPECIFICATIONS WILL BE KEPT AT ALL TIMES AT THE JOB SITE ON WHICH ALL CHANGES OR VARIATIONS IN THE WORK, INCLUDING ALL EXISTING UTILITIES, ARE TO BE RECORDED AND/OR CORRECTED DAILY AND SUBMITTED TO THE ENGINEER WHEN THE WORK TO BE DONE IS COMPLETED.
17. CONTRACTOR SHALL NOTIFY THE ENGINEER AT LEAST 72 HOURS IN ADVANCE OF COMMENCEMENT OF ANY PART OF THE WORK AND SHALL COORDINATE CONSTRUCTION SCHEDULE WITH CITY ENGINEER TO MINIMIZE IMPACT TO RESIDENTS.
18. THE DESIGN FEATURES INCLUDING HORIZONTAL AND VERTICAL ALIGNMENTS, TYPICAL SECTIONS, APPROACHES, AND OTHER DESIGN DETAILS SHOWN ON THESE DESIGN PLANS SHALL NOT BE ALTERED OR MODIFIED IN ANY WAY DURING CONSTRUCTION WITHOUT THE EXPRESSED, WRITTEN DIRECTION AND APPROVAL OF THE ENGINEER AND/OR CONTRACTING OFFICER. DRAINAGE STRUCTURES SHALL BE INSTALLED AS SHOWN THE PLANS WITH ONLY MINOR CORRECTIONS IN LOCATION SKEW AND/OR ELEVATIONS AS NEEDED TO FIT FIELD CONDITIONS AS DETERMINED BY THE ENGINEER OR OWNER'S REPRESENTATIVE.
19. NO WORK SHALL BE PERFORMED OUTSIDE OF THE DESIGNATED CONSTRUCTION LIMITS WITHOUT THE APPROVAL OF THE CITY OR THEIR REPRESENTATIVE.
20. THE CONTRACTOR IS RESPONSIBLE FOR COORDINATING STAGING AREAS WITH THE CITY OF ARCATA. ALL STAGING AREAS WITHIN THE RIGHT-OF-WAY SHALL BE PRE-APPROVED BY THE CITY.
21. UPON COMPLETION OF THE CONSTRUCTION PROJECT, THE CONTRACTOR SHALL LEAVE THE PROJECT AREA FREE OF DEBRIS AND UNUSED MATERIAL. ALL DAMAGE CAUSED BY THE CONTRACTOR SHALL BE RESTORED TO AN "AS GOOD OR BETTER" CONDITION.
22. EXISTING FENCING SHALL REMAIN IN PLACE AND UNDISTURBED BY CONSTRUCTION OPERATIONS UNLESS OTHERWISE SHOWN ON THE PLANS. CONTRACTOR SHALL BE HELD RESPONSIBLE FOR ANY AND ALL DAMAGES TO FENCES DURING CONSTRUCTION. ALL DAMAGE SHALL SHALL BE RESTORED TO EQUAL OR BETTER CONDITION AT THE CONTRACTOR'S EXPENSE.
23. EXISTING SIGN SYSTEMS SHALL BE PROTECTED THROUGHOUT CONSTRUCTION ACTIVITY UNLESS NOTED OTHERWISE ON PLANS. CONTRACTOR SHALL BE HELD RESPONSIBLE FOR ANY AND ALL DAMAGES TO SIGNS DURING CONSTRUCTION. ALL DAMAGE SHALL BE RESTORED TO EQUAL OR BETTER CONDITION AT THE CONTRACTOR'S EXPENSE.
24. CONTRACTOR IS RESPONSIBLE FOR ADDRESSING STORM WATER DRAINAGE AND DEWATERING OF WORK AREAS DURING CONSTRUCTION.
25. DURING WET WEATHER PERIODS, CONTRACTOR IS RESPONSIBLE FOR SEQUENCING CONSTRUCTION IN A MANNER TO MINIMIZE IMPACT ON OPEN EARTHWORK AND COMPACTION OPERATIONS.

UTILITY NOTES:

1. THE CONTRACTOR SHALL CONTACT UNDERGROUND SERVICE ALERT (USA) AT (800) 227-2600 AT LEAST FORTY-EIGHT (48) HOURS, BUT NOT LESS THAN TWO (2) WORKING DAYS, PRIOR TO ANY DEMOLITION OR EXCAVATION AND REQUEST FIELD MARKINGS OF ALL UNDERGROUND UTILITIES.
2. THE CITY OF ARCATA DOES NOT GUARANTEE THE COMPLETENESS OR ACCURACY OF THE EXISTING UNDERGROUND UTILITIES SHOWN ON THESE PLANS. THE CONTRACTOR IS SOLELY RESPONSIBLE FOR FIELD VERIFYING ANY POTENTIAL UTILITY CONFLICTS BETWEEN EXISTING UNDERGROUND UTILITIES AND THE WORK SHOWN ON THESE PLANS, INCLUDING BOTH POTENTIAL UTILITY CONFLICTS SHOWN ON THESE PLANS AND POTENTIAL UTILITY CONFLICTS NOT SHOWN ON THESE PLANS BUT EITHER LOCATED, FOUND, OR MARKED IN THE FIELD. WHERE POTENTIAL CONFLICTS ARE FOUND, THE CONTRACTOR SHALL TAKE WHATEVER MEASURES ARE NEEDED (INCLUDING PRELIMINARY POTHOLING OF THE UTILITIES AT THE POTENTIAL CONFLICT LOCATION) PRIOR TO PERFORMING WORK IN THE AREA TO ALLOW TIME FOR THE RESPONSIBLE AGENCY TO CORRECT THE CONFLICT. NO ADDITIONAL PAYMENT SHALL BE MADE BY THE CITY FOR ANY EXPENSE THE CONTRACTOR MAY INCUR AS A RESULT OF THEIR FAILURE TO ADEQUATELY EXPLORE, IN THE OPINION OF THE ENGINEER, POTENTIAL UTILITY CONFLICTS.
3. WHEN WATER OR SEWER SERVICE INTERRUPTION IS NECESSARY, THE CONTRACTOR SHALL NOTIFY ALL AFFECTED PERSONS AT LEAST FORTY-EIGHT (48) HOURS IN ADVANCE OF THE ANTICIPATED SERVICE INTERRUPTION. REFER TO THE CONTRACT SPECIAL PROVISIONS FOR ADDITIONAL REQUIREMENTS.
4. THE CONTRACTOR IS RESPONSIBLE FOR REPAIRING AND/OR REPLACING, TO THE SATISFACTION OF THE ENGINEER, ANY UTILITIES THAT ARE DAMAGED BY THEIR ACTIVITIES.
5. AT ANY LOCATION WHERE THE CONTRACTOR'S ACTIVITIES MAY EXPOSE AN ADJACENT WATER MAIN, THE CONTRACTOR SHALL EITHER RESTRAIN THE WATER MAIN OR REQUEST THAT THE CITY SHUT OFF WATER SERVICE IN THE AREA AND DEPRESSURIZE THE WATER MAIN. ANY WATER SHUTDOWN WILL REQUIRE THAT THE CONTRACTOR NOTIFY ALL AFFECTED RESIDENTS AND BUSINESSES WITHIN BOTH THE PRIMARY SHUTDOWN AREA AND THE BACKUP SHUTDOWN AREA AT LEAST TWO (2) WORKING DAYS IN ADVANCE OF THE ANTICIPATED SERVICE INTERRUPTION. THE CITY WILL PROVIDE THE SHUTDOWN NOTIFICATION FLIERS (ONE FOR PRIMARY AREAS, ONE FOR BACKUP AREAS); HOWEVER, THE CONTRACTOR SHALL BE RESPONSIBLE FOR CORRECTLY FILLING OUT, DUPLICATING, AND DISTRIBUTING THE FLIERS AS LISTED ABOVE. THE CONTRACTOR SHALL MAKE AN ALLOWANCE IN BOTH THEIR BID AND THEIR PROJECT SCHEDULE TO ALLOW FOR NOTIFICATION OF RESIDENTS AND BUSINESSES, AND NO ADDITIONAL PAYMENT WILL BE MADE BY THE CITY FOR ANY EXPENSES INCURRED BY THE CONTRACTOR TO COMPLETE THE REQUIRED NOTIFICATIONS
6. ALL EXISTING UTILITIES AND TIE-IN POINTS SHOULD BE CONSIDERED ACTIVE UTILITIES UNLESS OTHERWISE INDICATED.
7. STRUCTURAL EXCAVATION AND BACKFILL OF CULVERTS AND OTHER DRAINAGE STRUCTURES SHALL BE CONSIDERED INCIDENTAL TO INSTALLATION OF THE STRUCTURE. EXCESS MATERIAL REMOVED MAY BE USED TO REBUILD APPROACHES OR MAY BE PLACED ALONG ROADWAY SHOULDERS IN AREAS AS DIRECTED BY THE OWNER'S REPRESENTATIVE.
8. THE LOCATIONS OF PIPES MAY BE MODIFIED AS NECESSARY TO FIT ACTUAL FIELD CONDITIONS AS DETERMINED BY THE CITY OR THEIR REPRESENTATIVE.
9. EXISTING PIPES & CULVERTS TO BE REMOVED SHALL BECOME PROPERTY OF THE CONTRACTOR AND SHALL BE DISPOSED IN ACCORDANCE WITH THE PROJECT SPECIFICATIONS & STATE STANDARDS AND CODES.
10. CONSTRUCTION ACTIVITY WILL TAKE PLACE IN THE VICINITY OF OVERHEAD ELECTRIC TRANSMISSION LINES. IT IS THE CONTRACTOR'S RESPONSIBILITY TO BE AWARE OF, AND OBSERVE, THE MINIMUM CLEARANCES FOR WORKERS AND EQUIPMENT OPERATING NEAR HIGH VOLTAGE ELECTRIC LINES AS SET OUT IN THE HIGH VOLTAGE SAFETY ORDERS OF THE CALIFORNIA DIVISION OF INDUSTRIAL SAFETY AS WELL AS OTHER APPLICABLE SAFETY REGULATIONS.

TRAFFIC CONTROL NOTES:

1. THE CONTRACTOR SHALL PROVIDE TEMPORARY TRAFFIC CONTROL IN ACCORDANCE WITH THE CURRENT VERSION OF THE CALIFORNIA MANUAL OF UNIFORM TRAFFIC CONTROL DEVICES (MUTCD). A TRAFFIC CONTROL PLAN WILL NEED TO BE SUBMITTED AND APPROVED BY THE CITY PRIOR TO ANY WORK TAKING PLACE. THE PLAN SHALL PROVIDE ACCESS AT ALL TIMES FOR RESIDENTS AND EMERGENCY VEHICLES AND COMPLY WITH ALL REQUIRED PERMITS AND OTHER GUIDELINES LISTED ON THESE PLANS AND IN THE SPECIFICATIONS.
2. CONTRACTOR SHALL PROVIDE AND MAINTAIN SUFFICIENT TEMPORARY BARRIERS TO PROVIDE FOR THE SAFETY OF THE STAFF AND PUBLIC TO THE SATISFACTION OF THE ENGINEER.

EROSION CONTROL NOTES:

1. CONTRACTOR IS RESPONSIBLE FOR EROSION AND SEDIMENT CONTROL. CONTRACTOR SHALL USE CALTRANS STORMWATER QUALITY HANDBOOKS, CONSTRUCTION CONTRACTOR'S GUIDE AND SPECIFICATIONS.
2. DURING WET WEATHER PERIODS, CONTRACTOR IS RESPONSIBLE FOR SEQUENCING CONSTRUCTION IN A MANNER TO MINIMIZE IMPACT ON OPEN EARTHWORK AND COMPACTION OPERATIONS.
3. ALL NEWLY GRADED AREAS WITHIN THE PROJECT LIMITS, INCLUDING AREAS COVERED WITH EROSION CONTROL BLANKETS ARE TO BE SEEDED. THE PERMANENT PLANTINGS/SEED MIXTURE SHALL BE AS DIRECTED IN THE CONTRACT SPECIAL PROVISIONS, SWPPP OR THESE PLANS.
4. AFTER SEEDING, A MULCH CONSISTING OF GRASS, HAY OR STRAW SHALL BE BLOWN ON TO ALL NEWLY SEEDED AREAS AT A RATE OF TWO TONS PER ACRE.
5. IT WILL BE THE RESPONSIBILITY OF THE CONTRACTOR TO FIX ANY DEFICIENCIES INDICATED BY THE OWNER OR THE OWNERS REPRESENTATIVE TO PREVENT EROSION AND CONTROL SEDIMENT.
6. PRIOR TO FINAL ACCEPTANCE TEMPORARY SEDIMENT CONTROL MEASURES SHALL BE REMOVED AND ALL AREAS OF SOIL DISTURBANCE, INCLUDING BUT NOT LIMITED TO CUT AND FILL SLOPES, SWALES AND DITCHES SHALL BE STABILIZED.

CALL BEFORE YOU DIG
48 HR. NOTICE REQUIRED
CALL 811 OR 1–800–642–2444

EARTHWORK NOTES:

1. THE CONTRACTOR SHALL TAKE ALL NECESSARY PRECAUTIONS AND MEASURES TO PREVENT THE FLOW OF WATER, INCLUDING GROUNDWATER, FROM ENTERING ALL EXCAVATIONS WITHIN THE WORK AREA. IF WATER DOES ENTER AN EXCAVATION, SUCH WATER, WHEN REMOVAL IS NECESSARY TO PROCEED WITH THE WORK, SHALL BE PUMPED TO A CONTRACTOR SUPPLIED HOLDING TANK FOR DISPOSAL.
2. THE CONTRACTOR SHALL MAKE ARRANGEMENTS FOR DISPOSAL SITES AND SHALL PAY ANY AND ALL COSTS INVOLVED. WHEN ANY MATERIAL IS TO BE DISPOSED OF OUTSIDE THE PROJECT WORK AREA, THE CONTRACTOR SHALL OBTAIN BOTH A WRITTEN AGREEMENT BETWEEN THE PROPERTY OWNER AND THE CONTRACTOR AND A COPY OF THE PERMIT THAT ALLOWS MATERIAL DISPOSAL AT THE SUBJECT SITE. THE AGREEMENT SHALL GRANT THE CONTRACTOR PERMISSION TO USE THE PRIVATE PROPERTY AS A DISPOSAL SITE AND SHALL ABSOLVE THE CITY OF ALL RESPONSIBILITY FOR CONSEQUENCES OF SUCH USAGE. THE PERMIT COPY SHALL BE OBTAINED FROM THE PROPERTY OWNER, THE HUMBOLDT COUNTY BUILDING DEPARTMENT, THE CITY OF ARCATA BUILDING DEPARTMENT, OR OTHER REGULATORY AGENCY AS APPROPRIATE. BOTH THE AGREEMENT AND PERMIT SHALL BE FILED WITH THE ENGINEER PRIOR TO THE USE OF THE PROPERTY, AND THE CONTRACTOR SHALL OBTAIN PERMISSION FROM THE ENGINEER TO DISPOSE OF THE MATERIAL AT THE PROPOSED LOCATION DESIGNATED IN THE AGREEMENT AND ON THE PERMIT BEFORE ANY MATERIAL IS DISPOSED OF ON SAID PROPERTY. REFER TO THE CONTRACT SPECIAL PROVISIONS FOR ADDITIONAL REQUIREMENTS.
3. DISPOSAL OF MATERIALS IS NOT PERMITTED WITHIN THE PUBLIC RIGHT-OF-WAY UNLESS OTHERWISE SPECIFIED ON THE PLANS.
4. THE CONTRACTOR IS RESPONSIBLE FOR FIELD VERIFICATION OF ALL SURVEY DATA. CONTRACTOR IS RESPONSIBLE FOR ESTABLISHING RIGHT-OF-WAY LINES, SLOPE EASEMENTS, AND ALL HORIZONTAL AND VERTICAL CONTROL PRIOR TO CONSTRUCTION.
5. CONTRACTOR SHALL BE RESPONSIBLE FOR THE SAFETY OF ALL CONSTRUCTION. ADEQUATE SHORING BRACING, TIES, AND SUPPORTS SHALL BE USED TO PROVIDE PROPER TEMPORARY INTEGRITY DURING ALL PHASES OF CONSTRUCTION.
6. ALL EXISTING LANDSCAPED AND UNPAVED AREAS WHICH ARE DISTURBED BY CONSTRUCTION OR EARTHWORK OPERATIONS SHALL BE HAND RAKED SMOOTH AND RETURNED TO ORIGINAL EXISTING CONDITIONS.
7. ALL DITCHES, SWALES, GUTTERS, ETC. SHOULD BE CONSIDERED ACTIVE STORM CONVEYANCES UNLESS OTHERWISE INDICATED. CONTRACTOR IS RESPONSIBLE FOR ADDRESSING STORM WATER DRAINAGE AND DEWATERING OF WORK AREAS DURING CONSTRUCTION.
8. UNSUITABLE EXCAVATED MATERIAL, AS DETERMINED BY THE ENGINEER, SHALL BE REMOVED FROM SITE AND DISPOSED OF IN A MANNER CONSISTENT WITH APPLICABLE REGULATIONS SUCH AS CITY OR COUNTY GRADING ORDINANCES. DOCUMENT, REQUEST PERMISSION, AND DISCLOSE ANY ENVIRONMENTAL REGULATIONS WHEN PROPERLY DISPOSING OF UNSUITABLE MATERIALS TAKEN FROM THE SITE, AS REQUESTED BY THE ENGINEER.

SURVEYING NOTES:

1. ALL ELEVATIONS SHOWN ON THESE PLANS ARE ON THE STATE PLANE CALIFORNIA ZONE 1 NAD 1983 DATUM.
2. CONTRACTOR IS RESPONSIBLE FOR CONSTRUCTION STAKING AND SHALL ARRANGE FOR STAKING WITH A CALIFORNIA LICENSED SURVEYOR. TWO-DIMENSIONAL COMPUTER AIDED DESIGN (CAD) FILES WILL BE AVAILABLE AND PROVIDED TO THE CONTRACTOR PRIOR TO CONSTRUCTION. STAKING WILL BE REVIEWED BY OWNER FOR CONFORMANCE TO DESIGN PRIOR TO CONSTRUCTION.
3. CONTRACTOR SHALL VERIFY LOCATIONS, ELEVATIONS, DISTANCES, AND FEATURES THAT MAY AFFECT THE WORK. SHOULD EXISTING CONDITIONS DIFFER FROM THOSE SHOWN OR INDICATED, OR IF IT APPEARS THAT THESE PLANS, STANDARD SPECIFICATIONS, AND SPECIAL PROVISIONS DO NOT ADEQUATELY DETAIL THE WORK TO BE DONE, CONTRACTOR SHALL NOTIFY THE ENGINEER PRIOR TO CONTINUING WITH ANY RELATED WORK. NO ALLOWANCE WILL BE MADE ON THEIR BEHALF FOR ANY EXTRA EXPENSE RESULTING FROM FAILURE OR NEGLECT IN DETERMINING THE CONDITIONS UNDER WHICH WORK IS TO BE PERFORMED. NOTED DIMENSIONS TAKE PRECEDENCE OVER SCALE.
4. THE CONTRACTOR SHALL BE RESPONSIBLE FOR COORDINATING WITH THE CITY OF ARCATA ENGINEERING DEPARTMENT OR CITY SURVEYOR IN THE PRESERVATION OR PROTECTION OF SURVEY MONUMENTS, WHETHER SHOWN ON THE PLANS OR WHEN ENCOUNTERED DURING THE PROJECT.
5. IF MONUMENTS HAVE BEEN IDENTIFIED IN ADVANCE BY THE CITY OF ARCATA, OR OTHERS, AND NOTED ON THE PLANS, THE CONTRACTOR SHALL MARK OR IDENTIFY LOCATIONS PRIOR TO ANY DISTURBANCE FOR PROTECTION OR PERPETUATION DURING THE PROJECT. MONUMENTS THAT WILL INEVITABLY BE DESTROYED DURING CONSTRUCTION AND ARE IDENTIFIED AS SUCH ON THE PLANS, SHALL BE RESET IN AN APPROVED MONUMENT BOX, IF APPLICABLE, OR THEIR LOCATION SHALL BE PERPETUATED. ALL EFFORTS SHOULD BE MADE TO PRESERVE AND WORK AROUND EXISTING SURVEY MONUMENTS WHEN POSSIBLE.
6. ALL WORK INVOLVING INITIAL SEARCHING AND IDENTIFICATION OF MONUMENTS, INCLUDING THEIR SURVEYED LOCATIONS, IS TO BE DONE BY OR UNDER THE DISCRETION OF A LICENSED LAND SURVEYOR. A CORNER RECORD OR RECORD OF SURVEY, AS APPLICABLE, MUST BE FILED IN ACCORDANCE WITH THE PROFESSIONAL LAND SURVEYOR'S. ALL MONUMENTS RESET OR PERPETUATED MUST BE DONE BY OR UNDER THE DISCRETION OF A LICENSED LAND SURVEYOR.
7. MONUMENTS NOT SHOWN ON THE PLANS THAT ARE ENCOUNTERED DURING THE PROJECT ARE TO BE PROTECTED. STOP WORK NEAR THE MONUMENT AND NOTIFY THE PROJECT ENGINEER. CONTRACTOR MUST ENLIST A LICENSED LAND SURVEYOR TO SURVEY THE EXISTING LOCATION OF THE MONUMENT AND SET REFERENCE POINTS AS NECESSARY TO PERPETUATE THE "FOUND POSITION" OF THE MONUMENT. A REPLACEMENT MONUMENT SHALL BE RESET AND DEPICTED ON A CORNER RECORD OR RECORD OF SURVEY, AS APPLICABLE. ANY ALTERNATIVE TO RESETTING A MONUMENT SHALL BE DETERMINED THROUGH THE COORDINATION WITH THE PROJECT ENGINEER AND CITY SURVEYOR.
8. COSTS ASSOCIATED WITH FAILURE TO COMPLY WITH THESE PROVISIONS WILL BE BORNE BY THE CONTRACTOR.

REGISTERED PROFESSIONAL ENGINEER
DAVID E. CAISSE
No. C80962
CIVIL
STATE OF CALIFORNIA

REGISTERED PROFESSIONAL ENGINEER
NETRA KHATRI
75428
CIVIL
STATE OF CALIFORNIA

City of ARCATA

Sheet Title: GENERAL NOTES

Project Name: STEEL WATERLINE REPLACEMENT PROJECT

Project Address: VARIOUS LOCATIONS

Designed By: JONATHAN A. KIRCHUBEL
Drawn By: JONATHAN A. KIRCHUBEL
Checked By: DAVID CAISSE
Approved By: NETRA B. KHATRI

Date: JANUARY 2025	Sheet: G–005
Scale: N/A	Page: 5

SHEET KEY NOTES	
1	(N) 1" SERVICE LINE & WATER METER PER CITY STD DTL W-05
2	(N) 2" SERVICE LINE & WATER METER PER CITY STD DTL W-17
3	(N) 3 FLANGE TEE PER CITY STD DTL W-50
4	(N) 4 FLANGE CROSS PER CITY STD DTL W-50
5	(N) GATE VALVE AND BOX PER CITY STD DTL W-02
6	(N) FIRE HYDRANT, 6" FIRE LINE, & 6" GATE VALVE PER CITY STD DTL W-40
7	(N) BLOWOFF VALVE PER CITY STD DTL W-13
8	(N) 6" FIRE LINE & 6" GATE VALVE PER CITY STD DTL W-09
A	ABANDON (E) WATERLINE IN PLACE PER CITY STD DTL SS-14
R	REMOVE (E) WATERLINE, (TYP)
N	INSTALL (N) WATERLINE, (TYP)

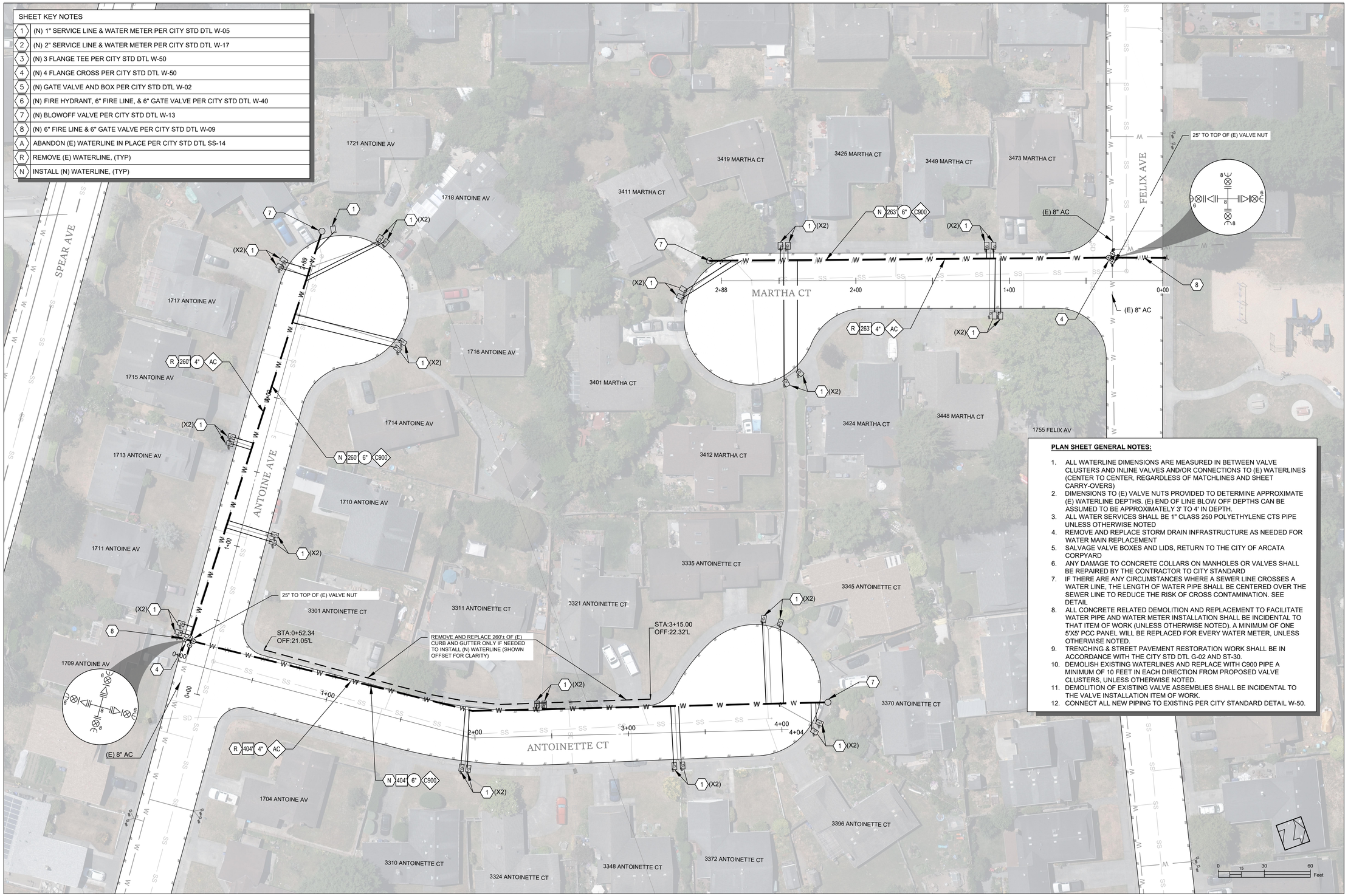

PLAN SHEET GENERAL NOTES:

1. ALL WATERLINE DIMENSIONS ARE MEASURED IN BETWEEN VALVE CLUSTERS AND INLINE VALVES AND/OR CONNECTIONS TO (E) WATERLINES (CENTER TO CENTER, REGARDLESS OF MATCHLINES AND SHEET CARRY-OVERS)
2. DIMENSIONS TO (E) VALVE NUTS PROVIDED TO DETERMINE APPROXIMATE (E) WATERLINE DEPTHS. (E) END OF LINE BLOW OFF DEPTHS CAN BE ASSUMED TO BE APPROXIMATELY 3' TO 4' IN DEPTH.
3. ALL WATER SERVICES SHALL BE 1" CLASS 250 POLYETHYLENE CTS PIPE UNLESS OTHERWISE NOTED
4. REMOVE AND REPLACE STORM DRAIN INFRASTRUCTURE AS NEEDED FOR WATER MAIN REPLACEMENT
5. SALVAGE VALVE BOXES AND LIDS, RETURN TO THE CITY OF ARCATA CORPYARD
6. ANY DAMAGE TO CONCRETE COLLARS ON MANHOLES OR VALVES SHALL BE REPAIRED BY THE CONTRACTOR TO CITY STANDARD
7. IF THERE ARE ANY CIRCUMSTANCES WHERE A SEWER LINE CROSSES A WATER LINE, THE LENGTH OF WATER PIPE SHALL BE CENTERED OVER THE SEWER LINE TO REDUCE THE RISK OF CROSS CONTAMINATION. SEE DETAIL
8. ALL CONCRETE RELATED DEMOLITION AND REPLACEMENT TO FACILITATE WATER PIPE AND WATER METER INSTALLATION SHALL BE INCIDENTAL TO THAT ITEM OF WORK (UNLESS OTHERWISE NOTED). A MINIMUM OF ONE 5'X5' PCC PANEL WILL BE REPLACED FOR EVERY WATER METER, UNLESS OTHERWISE NOTED.
9. TRENCHING & STREET PAVEMENT RESTORATION WORK SHALL BE IN ACCORDANCE WITH THE CITY STD DTL G-02 AND ST-30.
10. DEMOLISH EXISTING WATERLINES AND REPLACE WITH C900 PIPE A MINIMUM OF 10 FEET IN EACH DIRECTION FROM PROPOSED VALVE CLUSTERS, UNLESS OTHERWISE NOTED.
11. DEMOLITION OF EXISTING VALVE ASSEMBLIES SHALL BE INCIDENTAL TO THE VALVE INSTALLATION ITEM OF WORK.
12. CONNECT ALL NEW PIPING TO EXISTING PER CITY STANDARD DETAIL W-50.

ANTOINE AVE - PLAN VIEW
STATION 0+00 TO 2+89

ANTOINETTE CT - PLAN VIEW
STATION 0+00 TO 4+04

MARTHA CT - PLAN VIEW
STATION 0+00 TO 2+88

REGISTERED PROFESSIONAL ENGINEER
JON F. CAISSE
No. C80962
CIVIL
STATE OF CALIFORNIA

REGISTERED PROFESSIONAL ENGINEER
NETRA KHATRI
No. 75428
CIVIL
STATE OF CALIFORNIA

City of ARCATA

Sheet Title
ANTOINE AVE, ANTOINETTE CT & MARTHA CT

Project Name
STEEL WATERLINE REPLACEMENT PROJECT

Project Address
VARIOUS LOCATIONS

Designed By: JONATHAN A. KIRCHUBEL
Drawn By: JONATHAN A. KIRCHUBEL
Checked By: DAVID CAISSE
Approved By: NETRA B. KHATRI

Date: JANUARY 2025
Sheet: C-101
Scale: 1"=30'
Page: 6

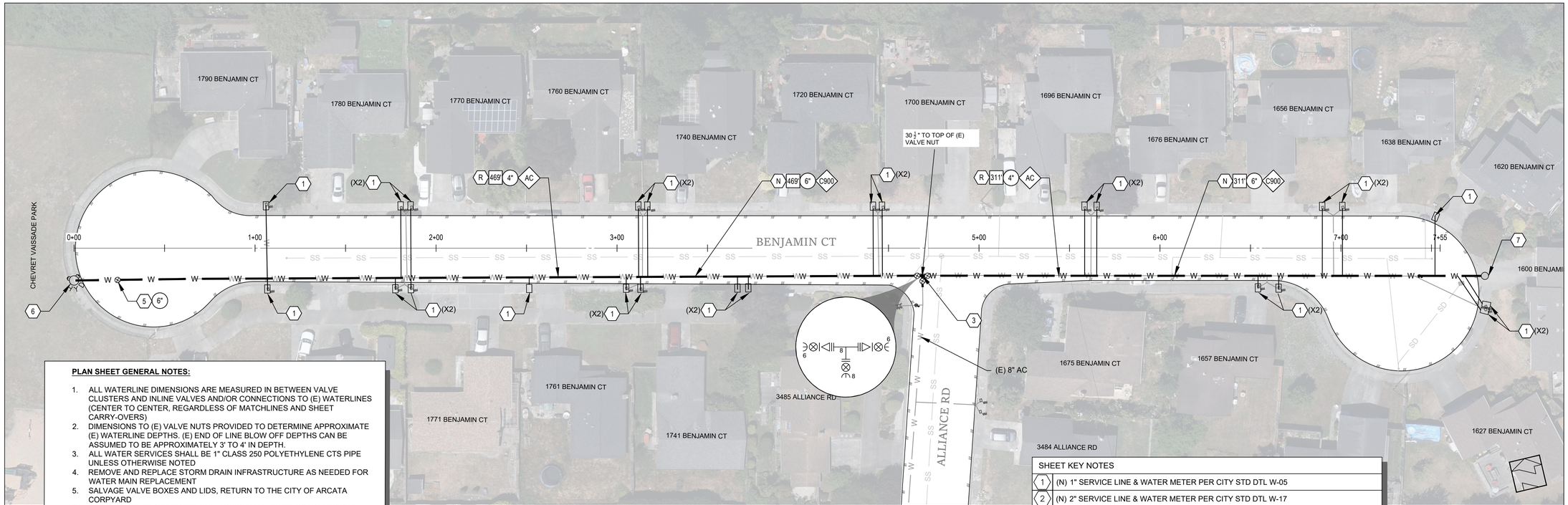

PLAN SHEET GENERAL NOTES:

1. ALL WATERLINE DIMENSIONS ARE MEASURED IN BETWEEN VALVE CLUSTERS AND INLINE VALVES AND/OR CONNECTIONS TO (E) WATERLINES (CENTER TO CENTER, REGARDLESS OF MATCHLINES AND SHEET CARRY-OVERS)
2. DIMENSIONS TO (E) VALVE NUTS PROVIDED TO DETERMINE APPROXIMATE (E) WATERLINE DEPTHS. (E) END OF LINE BLOW OFF DEPTHS CAN BE ASSUMED TO BE APPROXIMATELY 3' TO 4' IN DEPTH.
3. ALL WATER SERVICES SHALL BE 1" CLASS 250 POLYETHYLENE CTS PIPE UNLESS OTHERWISE NOTED
4. REMOVE AND REPLACE STORM DRAIN INFRASTRUCTURE AS NEEDED FOR WATER MAIN REPLACEMENT
5. SALVAGE VALVE BOXES AND LIDS, RETURN TO THE CITY OF ARCATA CORPYARD
6. ANY DAMAGE TO CONCRETE COLLARS ON MANHOLES OR VALVES SHALL BE REPAIRED BY THE CONTRACTOR TO CITY STANDARD
7. IF THERE ARE ANY CIRCUMSTANCES WHERE A SEWER LINE CROSSES A WATER LINE, THE LENGTH OF WATER PIPE SHALL BE CENTERED OVER THE SEWER LINE TO REDUCE THE RISK OF CROSS CONTAMINATION. SEE DETAIL
8. ALL CONCRETE RELATED DEMOLITION AND REPLACEMENT TO FACILITATE WATER PIPE AND WATER METER INSTALLATION SHALL BE INCIDENTAL TO THAT ITEM OF WORK (UNLESS OTHERWISE NOTED). A MINIMUM OF ONE 5'X5' PCC PANEL WILL BE REPLACED FOR EVERY WATER METER, UNLESS OTHERWISE NOTED.
9. TRENCHING & STREET PAVEMENT RESTORATION WORK SHALL BE IN ACCORDANCE WITH THE CITY STD DTL G-02 AND ST-30.
10. DEMOLISH EXISTING WATERLINES AND REPLACE WITH C900 PIPE A MINIMUM OF 10 FEET IN EACH DIRECTION FROM PROPOSED VALVE CLUSTERS, UNLESS OTHERWISE NOTED.
11. DEMOLITION OF EXISTING VALVE ASSEMBLIES SHALL BE INCIDENTAL TO THE VALVE INSTALLATION ITEM OF WORK.
12. CONNECT ALL NEW PIPING TO EXISTING PER CITY STANDARD DETAIL W-50.

SHEET KEY NOTES

1	(N) 1" SERVICE LINE & WATER METER PER CITY STD DTL W-05
2	(N) 2" SERVICE LINE & WATER METER PER CITY STD DTL W-17
3	(N) 3 FLANGE TEE PER CITY STD DTL W-50
4	(N) 4 FLANGE CROSS PER CITY STD DTL W-50
5	(N) GATE VALVE AND BOX PER CITY STD DTL W-02
6	(N) FIRE HYDRANT, 6" FIRE LINE, & 6" GATE VALVE PER CITY STD DTL W-40
7	(N) BLOWOFF VALVE PER CITY STD DTL W-13
8	(N) 6" FIRE LINE & 6" GATE VALVE PER CITY STD DTL W-09
A	ABANDON (E) WATERLINE IN PLACE PER CITY STD DTL SS-14
R	REMOVE (E) WATERLINE, (TYP)
N	INSTALL (N) WATERLINE, (TYP)

BENJAMIN CT - PLAN VIEW

STATION 0+00 TO 7+55

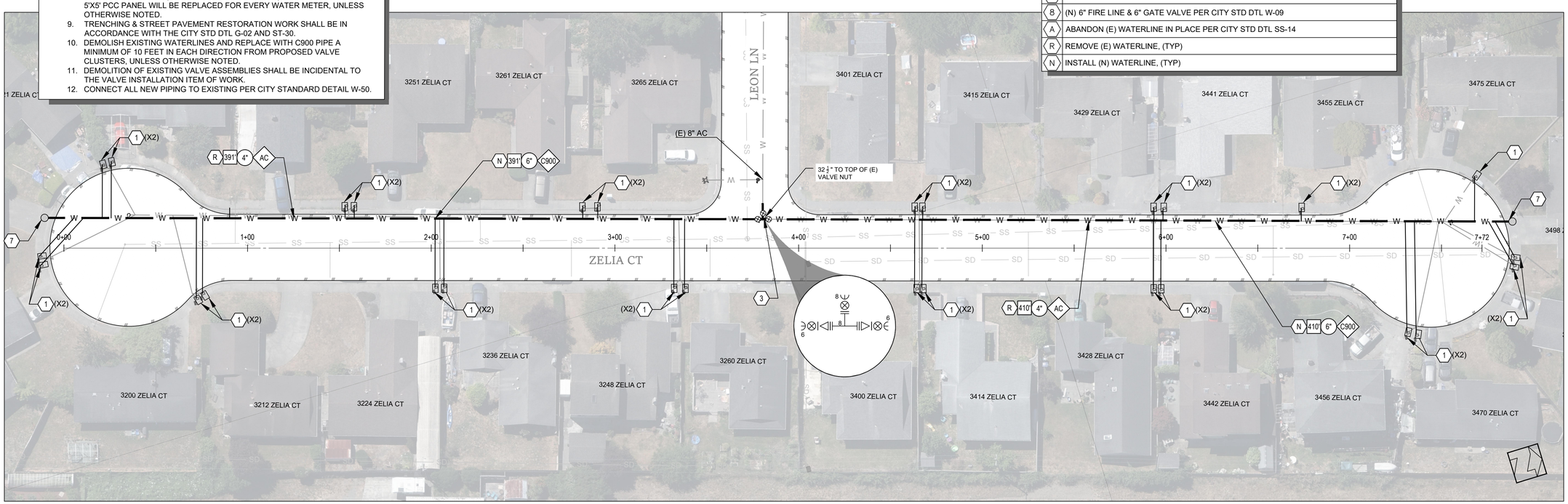

ZELIA CT - PLAN VIEW

STATION 0+00 TO 7+72

Sheet Title: BENJAMIN CT & ZELIA CT

Project Name: STEEL WATERLINE REPLACEMENT PROJECT

Project Address: VARIOUS LOCATIONS

Designed By	JONATHAN A. KIRCHUBEL
Drawn By	JONATHAN A. KIRCHUBEL
Checked By	DAVID CAISSE
Approved By	NETRA B. KHATRI
Date	JANUARY 2025
Sheet	C-102
Scale	1"=30'
Page	7

SHEET KEY NOTES	
1	(N) 1" SERVICE LINE & WATER METER PER CITY STD DTL W-05
2	(N) 2" SERVICE LINE & WATER METER PER CITY STD DTL W-17
3	(N) 3 FLANGE TEE PER CITY STD DTL W-50
4	(N) 4 FLANGE CROSS PER CITY STD DTL W-50
5	(N) GATE VALVE AND BOX PER CITY STD DTL W-02
6	(N) FIRE HYDRANT, 6" FIRE LINE, & 6" GATE VALVE PER CITY STD DTL W-40
7	(N) BLOWOFF VALVE PER CITY STD DTL W-13
8	(N) 6" FIRE LINE & 6" GATE VALVE PER CITY STD DTL W-09
A	ABANDON (E) WATERLINE IN PLACE PER CITY STD DTL SS-14
R	REMOVE (E) WATERLINE, (TYP)
N	INSTALL (N) WATERLINE, (TYP)

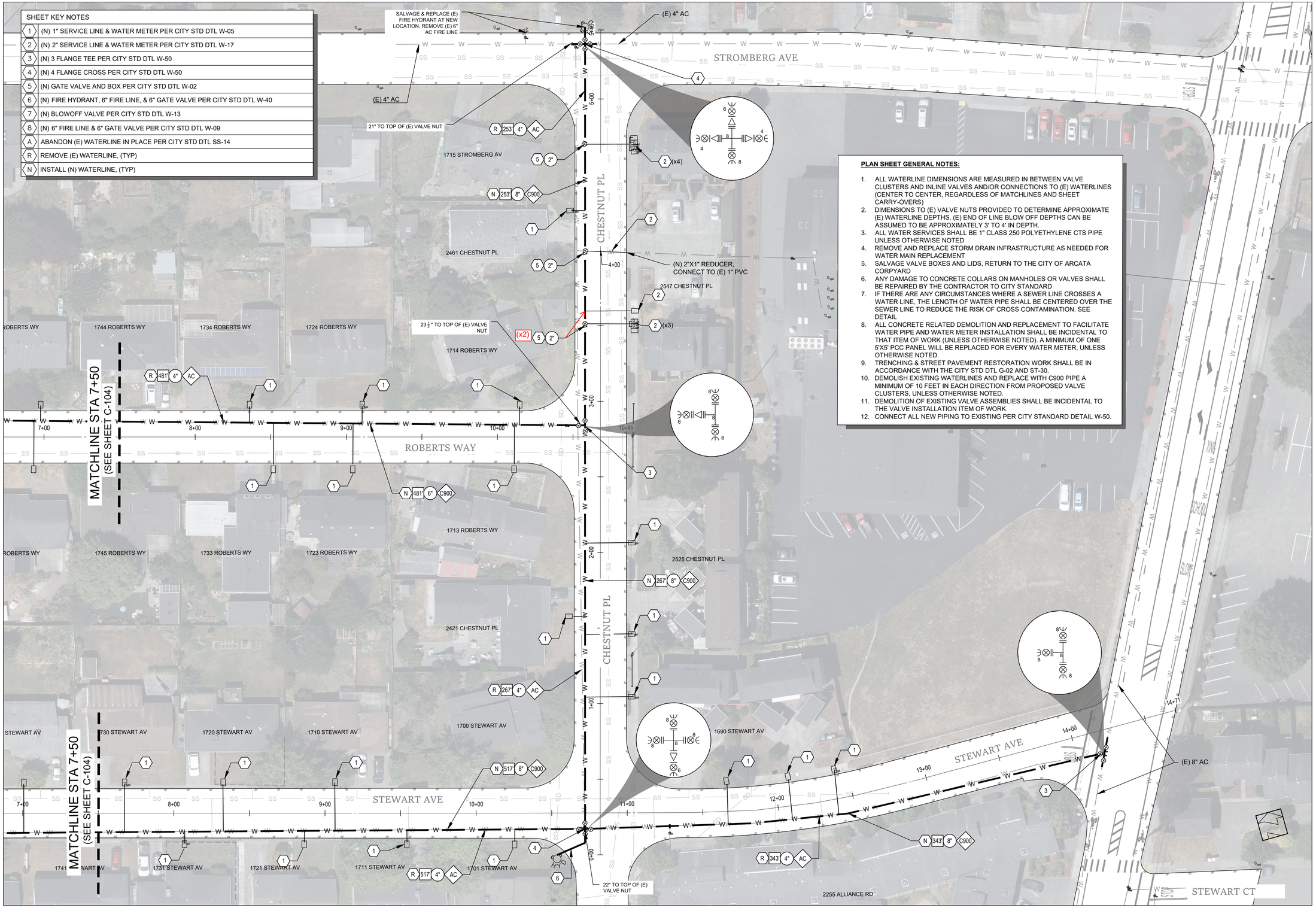

PLAN SHEET GENERAL NOTES:

1. ALL WATERLINE DIMENSIONS ARE MEASURED IN BETWEEN VALVE CLUSTERS AND INLINE VALVES AND/OR CONNECTIONS TO (E) WATERLINES (CENTER TO CENTER, REGARDLESS OF MATCHLINES AND SHEET CARRY-OVERS)
2. DIMENSIONS TO (E) VALVE NUTS PROVIDED TO DETERMINE APPROXIMATE (E) WATERLINE DEPTHS. (E) END OF LINE BLOW OFF DEPTHS CAN BE ASSUMED TO BE APPROXIMATELY 3' TO 4' IN DEPTH.
3. ALL WATER SERVICES SHALL BE 1" CLASS 250 POLYETHYLENE CTS PIPE UNLESS OTHERWISE NOTED
4. REMOVE AND REPLACE STORM DRAIN INFRASTRUCTURE AS NEEDED FOR WATER MAIN REPLACEMENT
5. SALVAGE VALVE BOXES AND LIDS, RETURN TO THE CITY OF ARCATA CORPYARD
6. ANY DAMAGE TO CONCRETE COLLARS ON MANHOLES OR VALVES SHALL BE REPAIRED BY THE CONTRACTOR TO CITY STANDARD
7. IF THERE ARE ANY CIRCUMSTANCES WHERE A SEWER LINE CROSSES A WATER LINE, THE LENGTH OF WATER PIPE SHALL BE CENTERED OVER THE SEWER LINE TO REDUCE THE RISK OF CROSS CONTAMINATION. SEE DETAIL
8. ALL CONCRETE RELATED DEMOLITION AND REPLACEMENT TO FACILITATE WATER PIPE AND WATER METER INSTALLATION SHALL BE INCIDENTAL TO THAT ITEM OF WORK (UNLESS OTHERWISE NOTED). A MINIMUM OF ONE 5'X5' PCC PANEL WILL BE REPLACED FOR EVERY WATER METER, UNLESS OTHERWISE NOTED.
9. TRENCHING & STREET PAVEMENT RESTORATION WORK SHALL BE IN ACCORDANCE WITH THE CITY STD DTL G-02 AND ST-30.
10. DEMOLISH EXISTING WATERLINES AND REPLACE WITH C900 PIPE A MINIMUM OF 10 FEET IN EACH DIRECTION FROM PROPOSED VALVE CLUSTERS, UNLESS OTHERWISE NOTED.
11. DEMOLITION OF EXISTING VALVE ASSEMBLIES SHALL BE INCIDENTAL TO THE VALVE INSTALLATION ITEM OF WORK.
12. CONNECT ALL NEW PIPING TO EXISTING PER CITY STANDARD DETAIL W-50.

ROBERTS WAY - PLAN VIEW
STATION 7+50 TO 10+85

STEWART AVE - PLAN VIEW
STATION 7+50 TO 14+71

CHESTNUT PL - PLAN VIEW
STATION 0+00 TO 5+46

0 15 30 60 Feet

City of ARCATA

Sheet Title: ROBERTS WAY, STEWART AVE, & CHESTNUT PL

Project Name: STEEL WATERLINE REPLACEMENT PROJECT

Project Address: VARIOUS LOCATIONS

Designed By	JONATHAN A. KIRCHUBEL
Drawn By	JONATHAN A. KIRCHUBEL
Checked By	DAVID CAISSE
Approved By	NETRA B. KHATRI
Date	JANUARY 2025
Sheet	C-103
Scale	1"=30'
Page	8

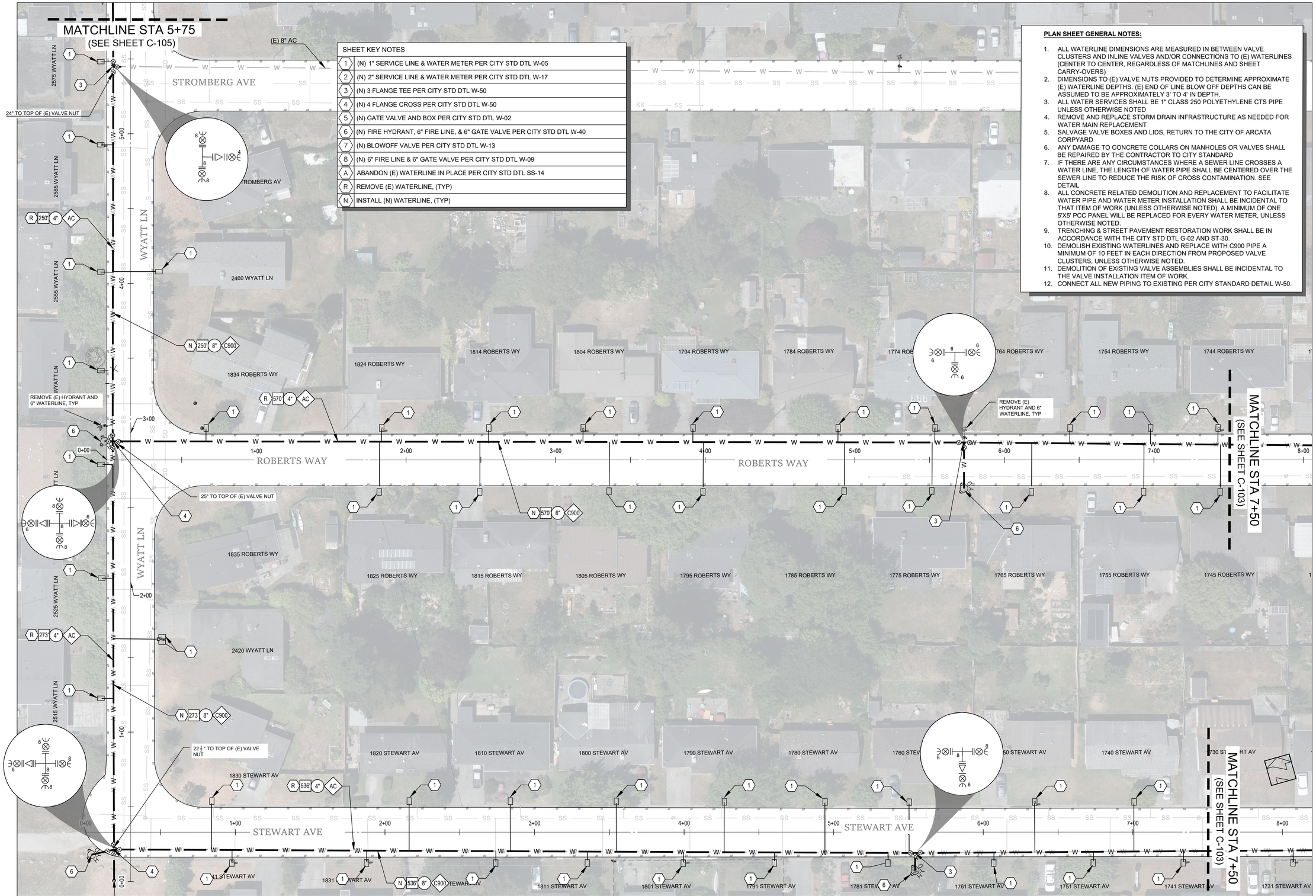

SHEET KEY NOTES

1	(N) 1" SERVICE LINE & WATER METER PER CITY STD DTL W-05
2	(N) 2" SERVICE LINE & WATER METER PER CITY STD DTL W-17
3	(N) 3 FLANGE TEE PER CITY STD DTL W-50
4	(N) 4 FLANGE CROSS PER CITY STD DTL W-50
5	(N) GATE VALVE AND BOX PER CITY STD DTL W-02
6	(N) FIRE HYDRANT, 6" FIRE LINE, & 6" GATE VALVE PER CITY STD DTL W-40
7	(N) BLOWOFF VALVE PER CITY STD DTL W-13
8	(N) 6" FIRE LINE & 6" GATE VALVE PER CITY STD DTL W-09
A	ABANDON (E) WATERLINE IN PLACE PER CITY STD DTL SS-14
R	REMOVE (E) WATERLINE, (TYP)
N	INSTALL (N) WATERLINE, (TYP)

PLAN SHEET GENERAL NOTES:

1. ALL WATERLINE DIMENSIONS ARE MEASURED IN BETWEEN VALVE CLUSTERS AND INLINE VALVES AND/OR CONNECTIONS TO (E) WATERLINES (CENTER TO CENTER, REGARDLESS OF MATCHLINES AND SHEET CARRY-OVERS)
2. DIMENSIONS TO (E) VALVE NUTS PROVIDED TO DETERMINE APPROXIMATE (E) WATERLINE DEPTHS. (E) END OF LINE BLOW OFF DEPTHS CAN BE ASSUMED TO BE APPROXIMATELY 3' TO 4' IN DEPTH.
3. ALL WATER SERVICES SHALL BE 1" CLASS 250 POLYETHYLENE CTS PIPE UNLESS OTHERWISE NOTED.
4. REMOVE AND REPLACE STORM DRAIN INFRASTRUCTURE AS NEEDED FOR WATER MAIN REPLACEMENT
5. SALVAGE VALVE BOXES AND LIDS, RETURN TO THE CITY OF ARCATA CORPYARD
6. ANY DAMAGE TO CONCRETE COLLARS ON MANHOLES OR VALVES SHALL BE REPAIRED BY THE CONTRACTOR TO CITY STANDARD
7. IF THERE ARE ANY CIRCUMSTANCES WHERE A SEWER LINE CROSSES A WATER LINE, THE LENGTH OF WATER PIPE SHALL BE CENTERED OVER THE SEWER LINE TO REDUCE THE RISK OF CROSS CONTAMINATION. SEE DETAIL
8. ALL CONCRETE RELATED DEMOLITION AND REPLACEMENT TO FACILITATE WATER PIPE AND WATER METER INSTALLATION SHALL BE INCIDENTAL TO THAT ITEM OF WORK (UNLESS OTHERWISE NOTED). A MINIMUM OF ONE 5'X5' PCC PANEL WILL BE REPLACED FOR EVERY WATER METER, UNLESS OTHERWISE NOTED.
9. TRENCHING & STREET PAVEMENT RESTORATION WORK SHALL BE IN ACCORDANCE WITH THE CITY STD DTL G-02 AND ST-30.
10. DEMOLISH EXISTING WATERLINES AND REPLACE WITH C900 PIPE A MINIMUM OF 10 FEET IN EACH DIRECTION FROM PROPOSED VALVE CLUSTERS, UNLESS OTHERWISE NOTED.
11. DEMOLITION OF EXISTING VALVE ASSEMBLIES SHALL BE INCIDENTAL TO THE VALVE INSTALLATION ITEM OF WORK.
12. CONNECT ALL NEW PIPING TO EXISTING PER CITY STANDARD DETAIL W-50.

WYATT LN - PLAN VIEW
STATION 0+00 TO 5+75

ROBERTS WAY - PLAN VIEW
STATION 0+00 TO 7+50

STEWART AVE - PLAN VIEW
STATION 0+00 TO 7+50

REGISTERED PROFESSIONAL ENGINEER
JON F. CAISSE
No. C82962
CIVIL
STATE OF CALIFORNIA

REGISTERED PROFESSIONAL ENGINEER
NETRA KHATRI
75428
CIVIL
STATE OF CALIFORNIA

City of ARCATA

Sheet Title
WYATT LN, ROBERTS WAY & STEWART AVE

Project Name
STEEL WATERLINE REPLACEMENT PROJECT

Project Address
VARIOUS LOCATIONS

Designed By	JONATHAN A. KIRCHUBEL
Drawn By	JONATHAN A. KIRCHUBEL
Checked By	DAVID CAISSE
Approved By	NETRA B. KHATRI

Date: JANUARY 2025	Sheet: C-104
Scale: 1"=30'	Page: 9

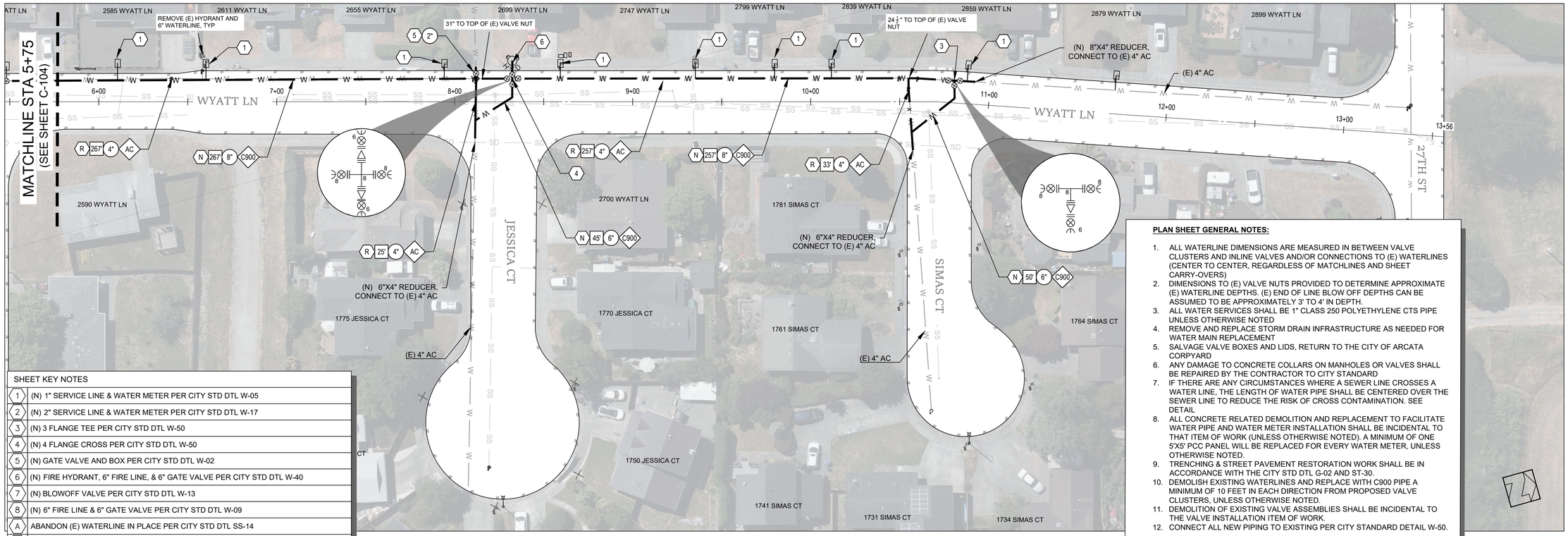

SHEET KEY NOTES	
1	(N) 1" SERVICE LINE & WATER METER PER CITY STD DTL W-05
2	(N) 2" SERVICE LINE & WATER METER PER CITY STD DTL W-17
3	(N) 3 FLANGE TEE PER CITY STD DTL W-50
4	(N) 4 FLANGE CROSS PER CITY STD DTL W-50
5	(N) GATE VALVE AND BOX PER CITY STD DTL W-02
6	(N) FIRE HYDRANT, 6" FIRE LINE, & 6" GATE VALVE PER CITY STD DTL W-40
7	(N) BLOWOFF VALVE PER CITY STD DTL W-13
8	(N) 6" FIRE LINE & 6" GATE VALVE PER CITY STD DTL W-09
A	ABANDON (E) WATERLINE IN PLACE PER CITY STD DTL SS-14
R	REMOVE (E) WATERLINE, (TYP)
N	INSTALL (N) WATERLINE, (TYP)

PLAN SHEET GENERAL NOTES:

1. ALL WATERLINE DIMENSIONS ARE MEASURED IN BETWEEN VALVE CLUSTERS AND INLINE VALVES AND/OR CONNECTIONS TO (E) WATERLINES (CENTER TO CENTER, REGARDLESS OF MATCHLINES AND SHEET CARRY-OVERS)
2. DIMENSIONS TO (E) VALVE NUTS PROVIDED TO DETERMINE APPROXIMATE (E) WATERLINE DEPTHS. (E) END OF LINE BLOW OFF DEPTHS CAN BE ASSUMED TO BE APPROXIMATELY 3' TO 4' IN DEPTH.
3. ALL WATER SERVICES SHALL BE 1" CLASS 250 POLYETHYLENE CTS PIPE UNLESS OTHERWISE NOTED
4. REMOVE AND REPLACE STORM DRAIN INFRASTRUCTURE AS NEEDED FOR WATER MAIN REPLACEMENT
5. SALVAGE VALVE BOXES AND LIDS, RETURN TO THE CITY OF ARCATA CORPYARD
6. ANY DAMAGE TO CONCRETE COLLARS ON MANHOLES OR VALVES SHALL BE REPAIRED BY THE CONTRACTOR TO CITY STANDARD
7. IF THERE ARE ANY CIRCUMSTANCES WHERE A SEWER LINE CROSSES A WATER LINE, THE LENGTH OF WATER PIPE SHALL BE CENTERED OVER THE SEWER LINE TO REDUCE THE RISK OF CROSS CONTAMINATION. SEE DETAIL
8. ALL CONCRETE RELATED DEMOLITION AND REPLACEMENT TO FACILITATE WATER PIPE AND WATER METER INSTALLATION SHALL BE INCIDENTAL TO THAT ITEM OF WORK (UNLESS OTHERWISE NOTED). A MINIMUM OF ONE 5'X5' PCC PANEL WILL BE REPLACED FOR EVERY WATER METER, UNLESS OTHERWISE NOTED.
9. TRENCHING & STREET PAVEMENT RESTORATION WORK SHALL BE IN ACCORDANCE WITH THE CITY STD DTL G-02 AND ST-30.
10. DEMOLISH EXISTING WATERLINES AND REPLACE WITH C900 PIPE A MINIMUM OF 10 FEET IN EACH DIRECTION FROM PROPOSED VALVE CLUSTERS, UNLESS OTHERWISE NOTED.
11. DEMOLITION OF EXISTING VALVE ASSEMBLIES SHALL BE INCIDENTAL TO THE VALVE INSTALLATION ITEM OF WORK.
12. CONNECT ALL NEW PIPING TO EXISTING PER CITY STANDARD DETAIL W-50.

WYATT LN - PLAN VIEW

STATION 5+75 TO 13+66

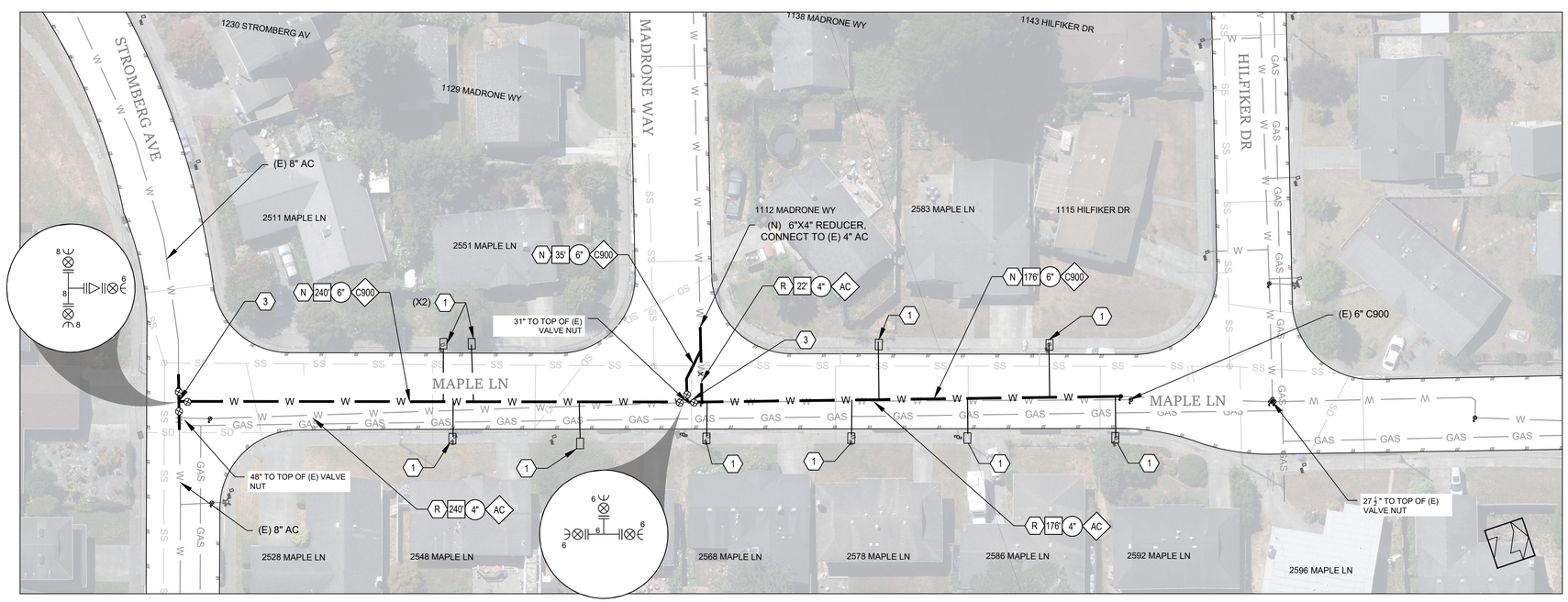

MAPLE LN - PLAN VIEW

STATION 0+00 TO 4+63

REGISTERED PROFESSIONAL ENGINEER JON F. CAISSE No. C82962 CIVIL STATE OF CALIFORNIA

REGISTERED PROFESSIONAL ENGINEER NETRA KHATRI 75428 CIVIL STATE OF CALIFORNIA

City of ARCATA

Sheet Title: WYATT LN & MAPLE LN

Project Name: STEEL WATERLINE REPLACEMENT PROJECT

Project Address: VARIOUS LOCATIONS

Designed By	JONATHAN A. KIRCHUBEL
Drawn By	JONATHAN A. KIRCHUBEL
Checked By	DAVID CAISSE
Approved By	NETRA B. KHATRI
Date	JANUARY 2025
Sheet	C-105
Scale	1"=30'
Page	10

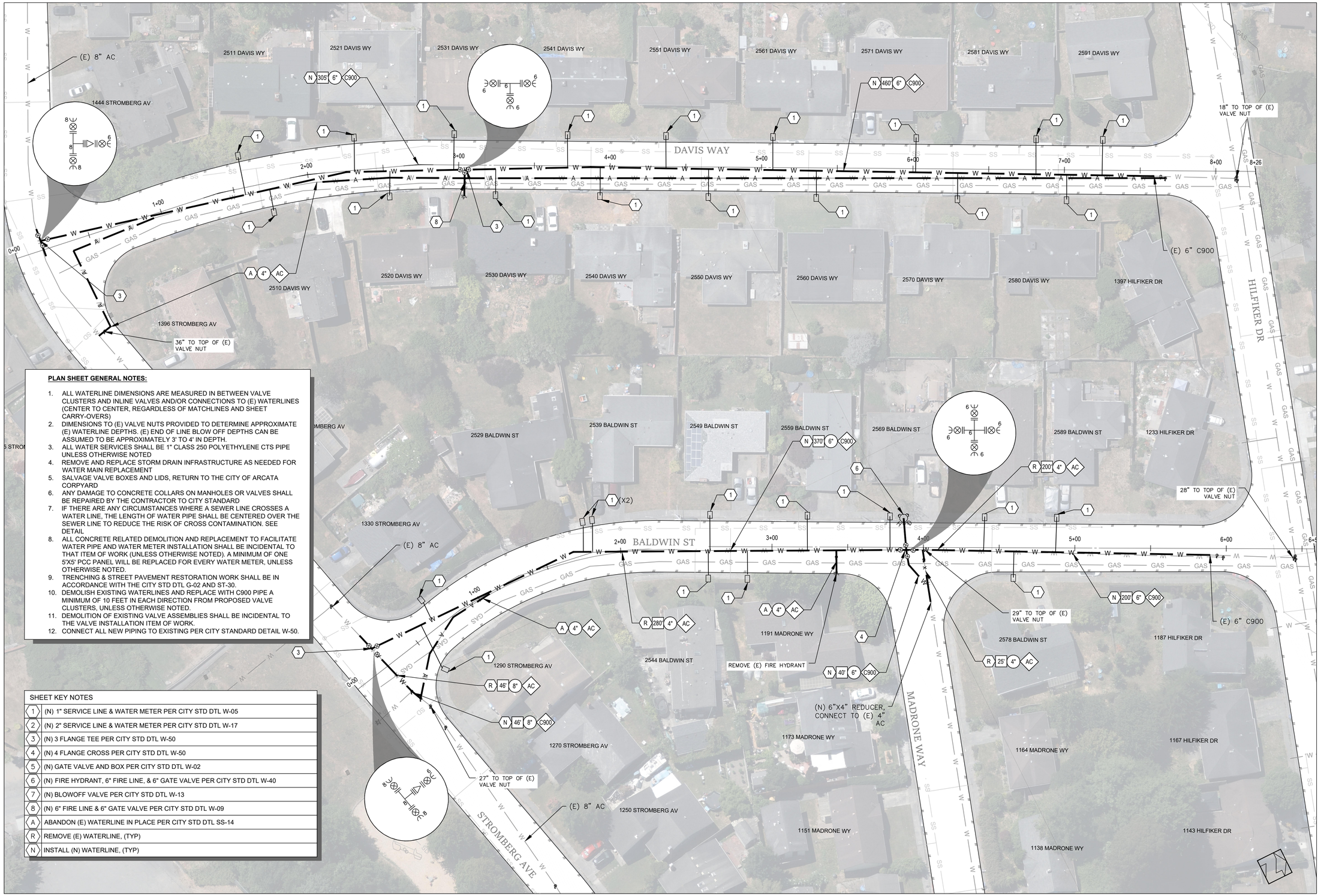

PLAN SHEET GENERAL NOTES:

1. ALL WATERLINE DIMENSIONS ARE MEASURED IN BETWEEN VALVE CLUSTERS AND INLINE VALVES AND/OR CONNECTIONS TO (E) WATERLINES (CENTER TO CENTER, REGARDLESS OF MATCHLINES AND SHEET CARRY-OVERS)
2. DIMENSIONS TO (E) VALVE NUTS PROVIDED TO DETERMINE APPROXIMATE (E) WATERLINE DEPTHS. (E) END OF LINE BLOW OFF DEPTHS CAN BE ASSUMED TO BE APPROXIMATELY 3' TO 4' IN DEPTH.
3. ALL WATER SERVICES SHALL BE 1" CLASS 250 POLYETHYLENE CTS PIPE UNLESS OTHERWISE NOTED
4. REMOVE AND REPLACE STORM DRAIN INFRASTRUCTURE AS NEEDED FOR WATER MAIN REPLACEMENT
5. SALVAGE VALVE BOXES AND LIDS, RETURN TO THE CITY OF ARCATA CORPYARD
6. ANY DAMAGE TO CONCRETE COLLARS ON MANHOLES OR VALVES SHALL BE REPAIRED BY THE CONTRACTOR TO CITY STANDARD
7. IF THERE ARE ANY CIRCUMSTANCES WHERE A SEWER LINE CROSSES A WATER LINE, THE LENGTH OF WATER PIPE SHALL BE CENTERED OVER THE SEWER LINE TO REDUCE THE RISK OF CROSS CONTAMINATION. SEE DETAIL
8. ALL CONCRETE RELATED DEMOLITION AND REPLACEMENT TO FACILITATE WATER PIPE AND WATER METER INSTALLATION SHALL BE INCIDENTAL TO THAT ITEM OF WORK (UNLESS OTHERWISE NOTED). A MINIMUM OF ONE 5'X5' PCC PANEL WILL BE REPLACED FOR EVERY WATER METER, UNLESS OTHERWISE NOTED.
9. TRENCHING & STREET PAVEMENT RESTORATION WORK SHALL BE IN ACCORDANCE WITH THE CITY STD DTL G-02 AND ST-30.
10. DEMOLISH EXISTING WATERLINES AND REPLACE WITH C900 PIPE A MINIMUM OF 10 FEET IN EACH DIRECTION FROM PROPOSED VALVE CLUSTERS, UNLESS OTHERWISE NOTED.
11. DEMOLITION OF EXISTING VALVE ASSEMBLIES SHALL BE INCIDENTAL TO THE VALVE INSTALLATION ITEM OF WORK.
12. CONNECT ALL NEW PIPING TO EXISTING PER CITY STANDARD DETAIL W-50.

SHEET KEY NOTES	
1	(N) 1" SERVICE LINE & WATER METER PER CITY STD DTL W-05
2	(N) 2" SERVICE LINE & WATER METER PER CITY STD DTL W-17
3	(N) 3 FLANGE TEE PER CITY STD DTL W-50
4	(N) 4 FLANGE CROSS PER CITY STD DTL W-50
5	(N) GATE VALVE AND BOX PER CITY STD DTL W-02
6	(N) FIRE HYDRANT, 6" FIRE LINE, & 6" GATE VALVE PER CITY STD DTL W-40
7	(N) BLOWOFF VALVE PER CITY STD DTL W-13
8	(N) 6" FIRE LINE & 6" GATE VALVE PER CITY STD DTL W-09
A	ABANDON (E) WATERLINE IN PLACE PER CITY STD DTL SS-14
R	REMOVE (E) WATERLINE, (TYP)
N	INSTALL (N) WATERLINE, (TYP)

DAVIS WAY – PLAN VIEW
STATION 0+00 TO 8+26

BALDWIN ST – PLAN VIEW
STATION 0+00 TO 6+25

0 15 30 60 Feet

REGISTERED PROFESSIONAL ENGINEER JOHN F. CAISSE No. C82962 CIVIL STATE OF CALIFORNIA

REGISTERED PROFESSIONAL ENGINEER NETRA KHATRI 75428 CIVIL STATE OF CALIFORNIA

City of ARCATA

Sheet Title: DAVIS WAY & BALDWIN ST

Project Name: STEEL WATERLINE REPLACEMENT PROJECT

Project Address: VARIOUS LOCATIONS

Designed By: JONATHAN A. KIRCHUBEL

Drawn By: JONATHAN A. KIRCHUBEL

Checked By: DAVID CAISSE

Approved By: NETRA B. KHATRI

Date: JANUARY 2025

Sheet: C-106

Scale: 1"=30'

Page: 11

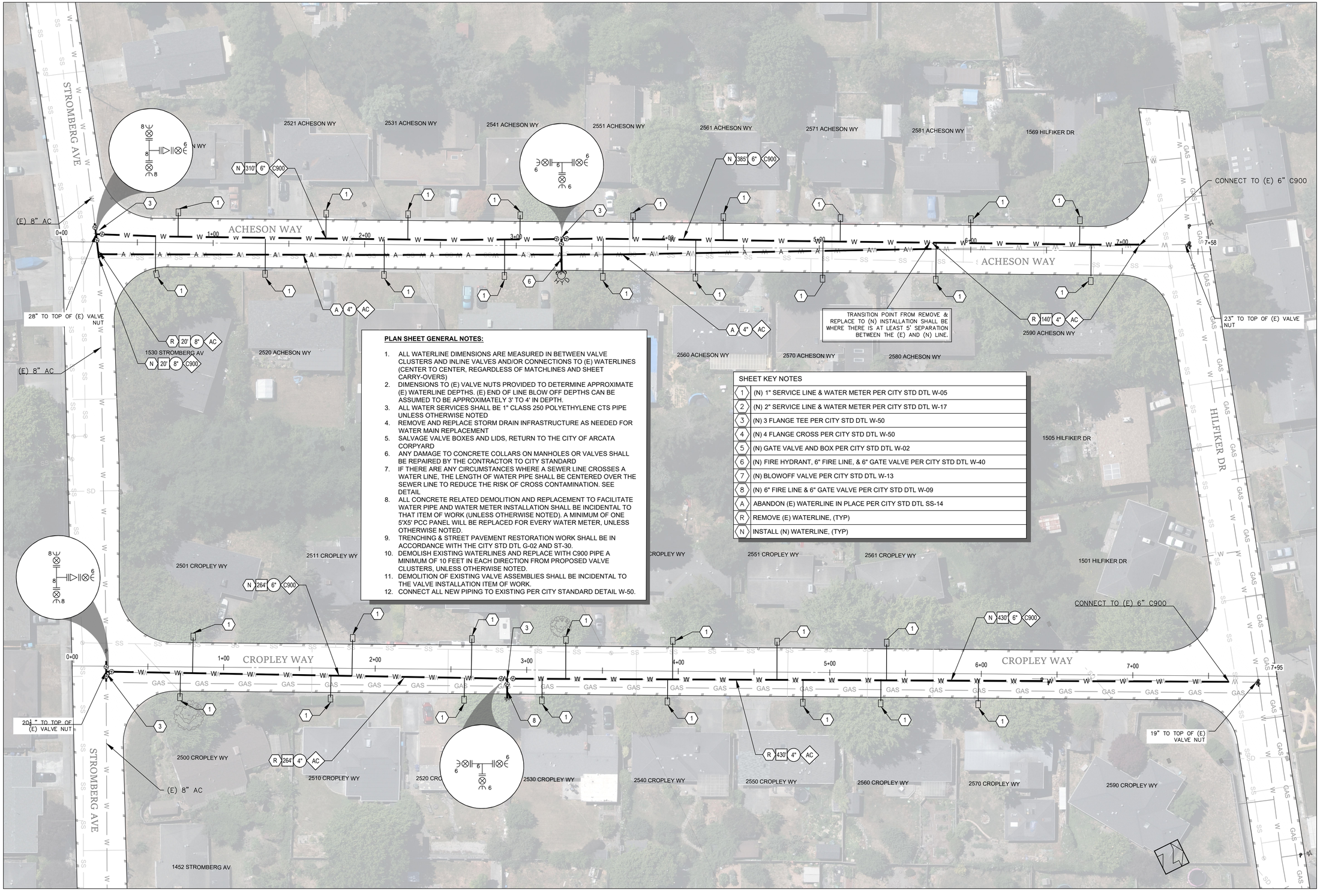

PLAN SHEET GENERAL NOTES:

1. ALL WATERLINE DIMENSIONS ARE MEASURED IN BETWEEN VALVE CLUSTERS AND INLINE VALVES AND/OR CONNECTIONS TO (E) WATERLINES (CENTER TO CENTER, REGARDLESS OF MATCHLINES AND SHEET CARRY-OVERS)
2. DIMENSIONS TO (E) VALVE NUTS PROVIDED TO DETERMINE APPROXIMATE (E) WATERLINE DEPTHS. (E) END OF LINE BLOW OFF DEPTHS CAN BE ASSUMED TO BE APPROXIMATELY 3' TO 4' IN DEPTH.
3. ALL WATER SERVICES SHALL BE 1" CLASS 250 POLYETHYLENE CTS PIPE UNLESS OTHERWISE NOTED
4. REMOVE AND REPLACE STORM DRAIN INFRASTRUCTURE AS NEEDED FOR WATER MAIN REPLACEMENT
5. SALVAGE VALVE BOXES AND LIDS, RETURN TO THE CITY OF ARCATA CORPYARD
6. ANY DAMAGE TO CONCRETE COLLARS ON MANHOLES OR VALVES SHALL BE REPAIRED BY THE CONTRACTOR TO CITY STANDARD
7. IF THERE ARE ANY CIRCUMSTANCES WHERE A SEWER LINE CROSSES A WATER LINE, THE LENGTH OF WATER PIPE SHALL BE CENTERED OVER THE SEWER LINE TO REDUCE THE RISK OF CROSS CONTAMINATION. SEE DETAIL
8. ALL CONCRETE RELATED DEMOLITION AND REPLACEMENT TO FACILITATE WATER PIPE AND WATER METER INSTALLATION SHALL BE INCIDENTAL TO THAT ITEM OF WORK (UNLESS OTHERWISE NOTED). A MINIMUM OF ONE 5'X5' PCC PANEL WILL BE REPLACED FOR EVERY WATER METER, UNLESS OTHERWISE NOTED.
9. TRENCHING & STREET PAVEMENT RESTORATION WORK SHALL BE IN ACCORDANCE WITH THE CITY STD DTL G-02 AND ST-30.
10. DEMOLISH EXISTING WATERLINES AND REPLACE WITH C900 PIPE A MINIMUM OF 10 FEET IN EACH DIRECTION FROM PROPOSED VALVE CLUSTERS, UNLESS OTHERWISE NOTED.
11. DEMOLITION OF EXISTING VALVE ASSEMBLIES SHALL BE INCIDENTAL TO THE VALVE INSTALLATION ITEM OF WORK.
12. CONNECT ALL NEW PIPING TO EXISTING PER CITY STANDARD DETAIL W-50.

SHEET KEY NOTES	
1	(N) 1" SERVICE LINE & WATER METER PER CITY STD DTL W-05
2	(N) 2" SERVICE LINE & WATER METER PER CITY STD DTL W-17
3	(N) 3 FLANGE TEE PER CITY STD DTL W-50
4	(N) 4 FLANGE CROSS PER CITY STD DTL W-50
5	(N) GATE VALVE AND BOX PER CITY STD DTL W-02
6	(N) FIRE HYDRANT, 6" FIRE LINE, & 6" GATE VALVE PER CITY STD DTL W-40
7	(N) BLOWOFF VALVE PER CITY STD DTL W-13
8	(N) 6" FIRE LINE & 6" GATE VALVE PER CITY STD DTL W-09
A	ABANDON (E) WATERLINE IN PLACE PER CITY STD DTL SS-14
R	REMOVE (E) WATERLINE, (TYP)
N	INSTALL (N) WATERLINE, (TYP)

ARCHESON WAY – PLAN VIEW
STATION 0+00 TO 7+58

CROPLEY WAY – PLAN VIEW
STATION 0+00 TO 7+95

0 15 30 60 Feet

REGISTERED PROFESSIONAL ENGINEER DAVID F. CAISSE No. C80962 CIVIL STATE OF CALIFORNIA

REGISTERED PROFESSIONAL ENGINEER NETRA KHATRI 75428 CIVIL STATE OF CALIFORNIA

City of ARCATA

Sheet Title: ARCHESON WAY & CROPLEY WAY

Project Name: STEEL WATERLINE REPLACEMENT PROJECT

Project Address: VARIOUS LOCATIONS

Designed By: JONATHAN A. KIRCHUBEL
Drawn By: JONATHAN A. KIRCHUBEL
Checked By: DAVID CAISSE
Approved By: NETRA B. KHATRI

Date: JANUARY 2025
Sheet: C-107
Scale: 1"=30'
Page: 12

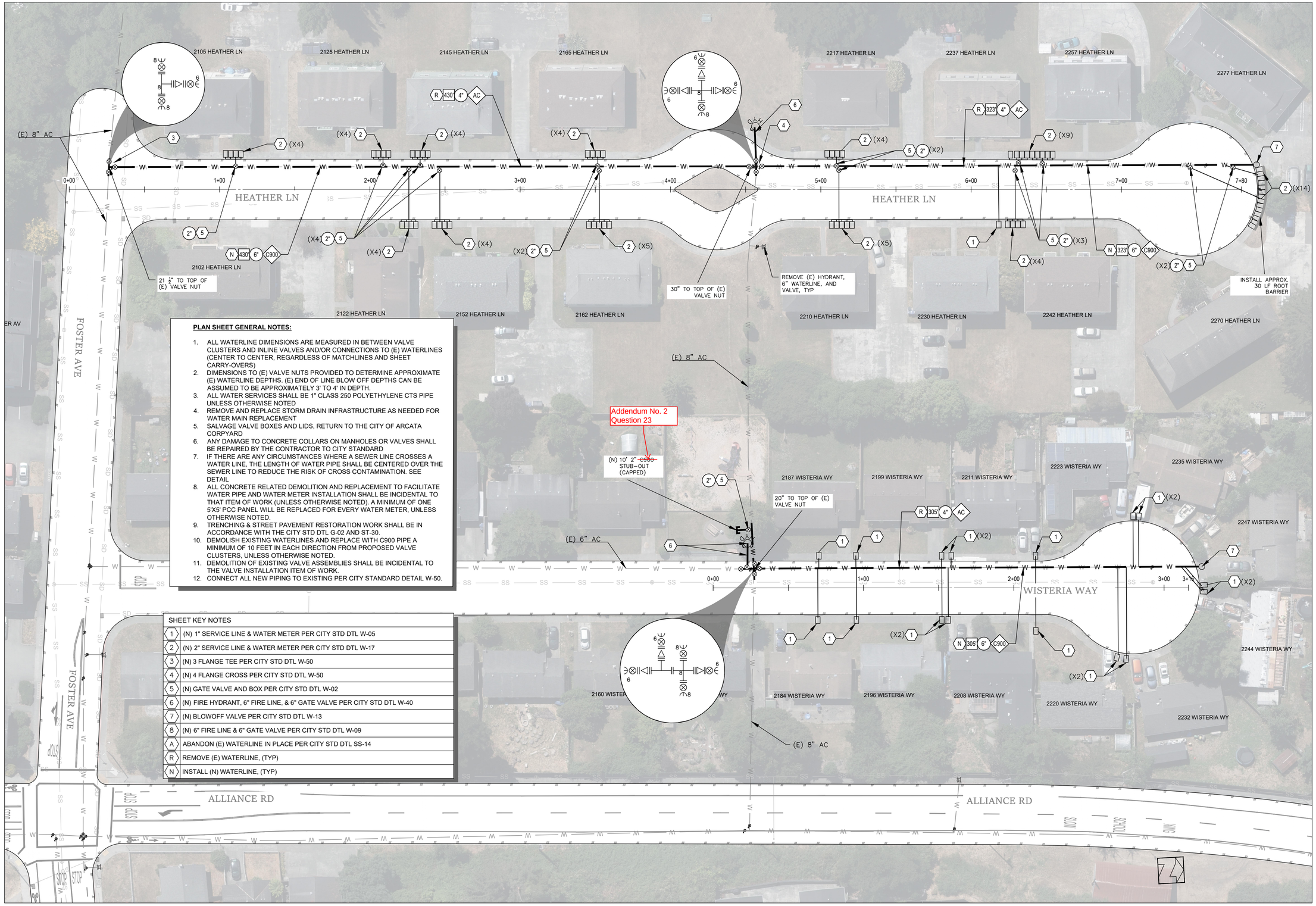

PLAN SHEET GENERAL NOTES:

1. ALL WATERLINE DIMENSIONS ARE MEASURED IN BETWEEN VALVE CLUSTERS AND INLINE VALVES AND/OR CONNECTIONS TO (E) WATERLINES (CENTER TO CENTER, REGARDLESS OF MATCHLINES AND SHEET CARRY-OVERS)
2. DIMENSIONS TO (E) VALVE NUTS PROVIDED TO DETERMINE APPROXIMATE (E) WATERLINE DEPTHS. (E) END OF LINE BLOW OFF DEPTHS CAN BE ASSUMED TO BE APPROXIMATELY 3' TO 4' IN DEPTH.
3. ALL WATER SERVICES SHALL BE 1" CLASS 250 POLYETHYLENE CTS PIPE UNLESS OTHERWISE NOTED
4. REMOVE AND REPLACE STORM DRAIN INFRASTRUCTURE AS NEEDED FOR WATER MAIN REPLACEMENT
5. SALVAGE VALVE BOXES AND LIDS, RETURN TO THE CITY OF ARCATA CORPYARD
6. ANY DAMAGE TO CONCRETE COLLARS ON MANHOLES OR VALVES SHALL BE REPAIRED BY THE CONTRACTOR TO CITY STANDARD
7. IF THERE ARE ANY CIRCUMSTANCES WHERE A SEWER LINE CROSSES A WATER LINE, THE LENGTH OF WATER PIPE SHALL BE CENTERED OVER THE SEWER LINE TO REDUCE THE RISK OF CROSS CONTAMINATION. SEE DETAIL
8. ALL CONCRETE RELATED DEMOLITION AND REPLACEMENT TO FACILITATE WATER PIPE AND WATER METER INSTALLATION SHALL BE INCIDENTAL TO THAT ITEM OF WORK (UNLESS OTHERWISE NOTED). A MINIMUM OF ONE 5'X5' PCC PANEL WILL BE REPLACED FOR EVERY WATER METER, UNLESS OTHERWISE NOTED.
9. TRENCHING & STREET PAVEMENT RESTORATION WORK SHALL BE IN ACCORDANCE WITH THE CITY STD DTL G-02 AND ST-30.
10. DEMOLISH EXISTING WATERLINES AND REPLACE WITH C900 PIPE A MINIMUM OF 10 FEET IN EACH DIRECTION FROM PROPOSED VALVE CLUSTERS, UNLESS OTHERWISE NOTED.
11. DEMOLITION OF EXISTING VALVE ASSEMBLIES SHALL BE INCIDENTAL TO THE VALVE INSTALLATION ITEM OF WORK.
12. CONNECT ALL NEW PIPING TO EXISTING PER CITY STANDARD DETAIL W-50.

SHEET KEY NOTES	
1	(N) 1" SERVICE LINE & WATER METER PER CITY STD DTL W-05
2	(N) 2" SERVICE LINE & WATER METER PER CITY STD DTL W-17
3	(N) 3 FLANGE TEE PER CITY STD DTL W-50
4	(N) 4 FLANGE CROSS PER CITY STD DTL W-50
5	(N) GATE VALVE AND BOX PER CITY STD DTL W-02
6	(N) FIRE HYDRANT, 6" FIRE LINE, & 6" GATE VALVE PER CITY STD DTL W-40
7	(N) BLOWOFF VALVE PER CITY STD DTL W-13
8	(N) 6" FIRE LINE & 6" GATE VALVE PER CITY STD DTL W-09
A	ABANDON (E) WATERLINE IN PLACE PER CITY STD DTL SS-14
R	REMOVE (E) WATERLINE, (TYP)
N	INSTALL (N) WATERLINE, (TYP)

HEATHER LN – PLAN VIEW
STATION 0+00 TO 7+80

WISTERIA WAY – PLAN VIEW
STATION 0+00 TO 3+16

0 15 30 60 Feet

REGISTERED PROFESSIONAL ENGINEER DAVID F. CAISSE No. C80962 CIVIL STATE OF CALIFORNIA

REGISTERED PROFESSIONAL ENGINEER NETRA KHATRI 75428 CIVIL STATE OF CALIFORNIA

City of ARCATA

Sheet Title: HEATHER LN & WISTERIA WAY

Project Name: STEEL WATERLINE REPLACEMENT PROJECT

Project Address: VARIOUS LOCATIONS

Designed By: JONATHAN A. KIRCHUBEL

Drawn By: JONATHAN A. KIRCHUBEL

Checked By: DAVID CAISSE

Approved By: NETRA B. KHATRI

Date: JANUARY 2025

Sheet: C-108

Scale: 1"=30'

Page: 13

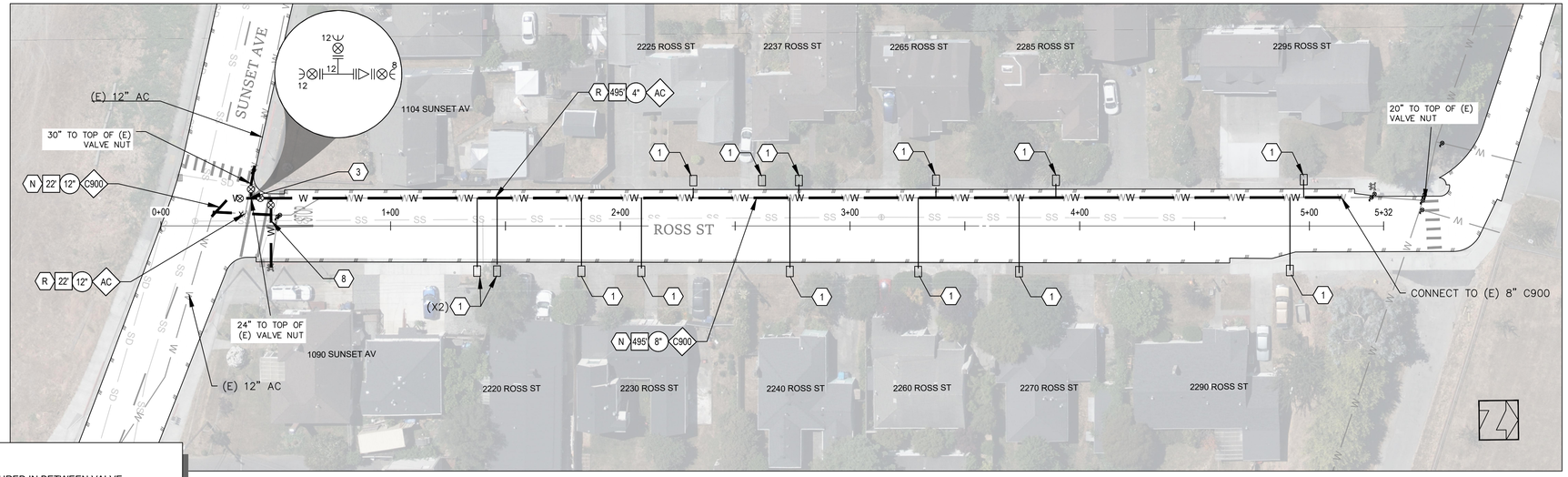

ROSS ST – PLAN VIEW
STATION 0+00 TO 5+32

0 15 30 60 Feet

PLAN SHEET GENERAL NOTES:

1. ALL WATERLINE DIMENSIONS ARE MEASURED IN BETWEEN VALVE CLUSTERS AND INLINE VALVES AND/OR CONNECTIONS TO (E) WATERLINES (CENTER TO CENTER, REGARDLESS OF MATCHLINES AND SHEET CARRY-OVERS)
2. DIMENSIONS TO (E) VALVE NUTS PROVIDED TO DETERMINE APPROXIMATE (E) WATERLINE DEPTHS. (E) END OF LINE BLOW OFF DEPTHS CAN BE ASSUMED TO BE APPROXIMATELY 3' TO 4' IN DEPTH.
3. ALL WATER SERVICES SHALL BE 1" CLASS 250 POLYETHYLENE CTS PIPE UNLESS OTHERWISE NOTED
4. REMOVE AND REPLACE STORM DRAIN INFRASTRUCTURE AS NEEDED FOR WATER MAIN REPLACEMENT
5. SALVAGE VALVE BOXES AND LIDS, RETURN TO THE CITY OF ARCATA CORPYARD
6. ANY DAMAGE TO CONCRETE COLLARS ON MANHOLES OR VALVES SHALL BE REPAIRED BY THE CONTRACTOR TO CITY STANDARD
7. IF THERE ARE ANY CIRCUMSTANCES WHERE A SEWER LINE CROSSES A WATER LINE, THE LENGTH OF WATER PIPE SHALL BE CENTERED OVER THE SEWER LINE TO REDUCE THE RISK OF CROSS CONTAMINATION. SEE DETAIL
8. ALL CONCRETE RELATED DEMOLITION AND REPLACEMENT TO FACILITATE WATER PIPE AND WATER METER INSTALLATION SHALL BE INCIDENTAL TO THAT ITEM OF WORK (UNLESS OTHERWISE NOTED). A MINIMUM OF ONE 5'X5' PCC PANEL WILL BE REPLACED FOR EVERY WATER METER, UNLESS OTHERWISE NOTED.
9. TRENCHING & STREET PAVEMENT RESTORATION WORK SHALL BE IN ACCORDANCE WITH THE CITY STD DTL G-02 AND ST-30.
10. DEMOLISH EXISTING WATERLINES AND REPLACE WITH C900 PIPE A MINIMUM OF 10 FEET IN EACH DIRECTION FROM PROPOSED VALVE CLUSTERS, UNLESS OTHERWISE NOTED.
11. DEMOLITION OF EXISTING VALVE ASSEMBLIES SHALL BE INCIDENTAL TO THE VALVE INSTALLATION ITEM OF WORK.
12. CONNECT ALL NEW PIPING TO EXISTING PER CITY STANDARD DETAIL W-50.

SHEET KEY NOTES	
1	(N) 1" SERVICE LINE & WATER METER PER CITY STD DTL W-05
2	(N) 2" SERVICE LINE & WATER METER PER CITY STD DTL W-17
3	(N) 3 FLANGE TEE PER CITY STD DTL W-50
4	(N) 4 FLANGE CROSS PER CITY STD DTL W-50
5	(N) GATE VALVE AND BOX PER CITY STD DTL W-02
6	(N) FIRE HYDRANT, 6" FIRE LINE, & 6" GATE VALVE PER CITY STD DTL W-40
7	(N) BLOWOFF VALVE PER CITY STD DTL W-13
8	(N) 6" FIRE LINE & 6" GATE VALVE PER CITY STD DTL W-09
A	ABANDON (E) WATERLINE IN PLACE PER CITY STD DTL SS-14
R	REMOVE (E) WATERLINE, (TYP)
N	INSTALL (N) WATERLINE, (TYP)

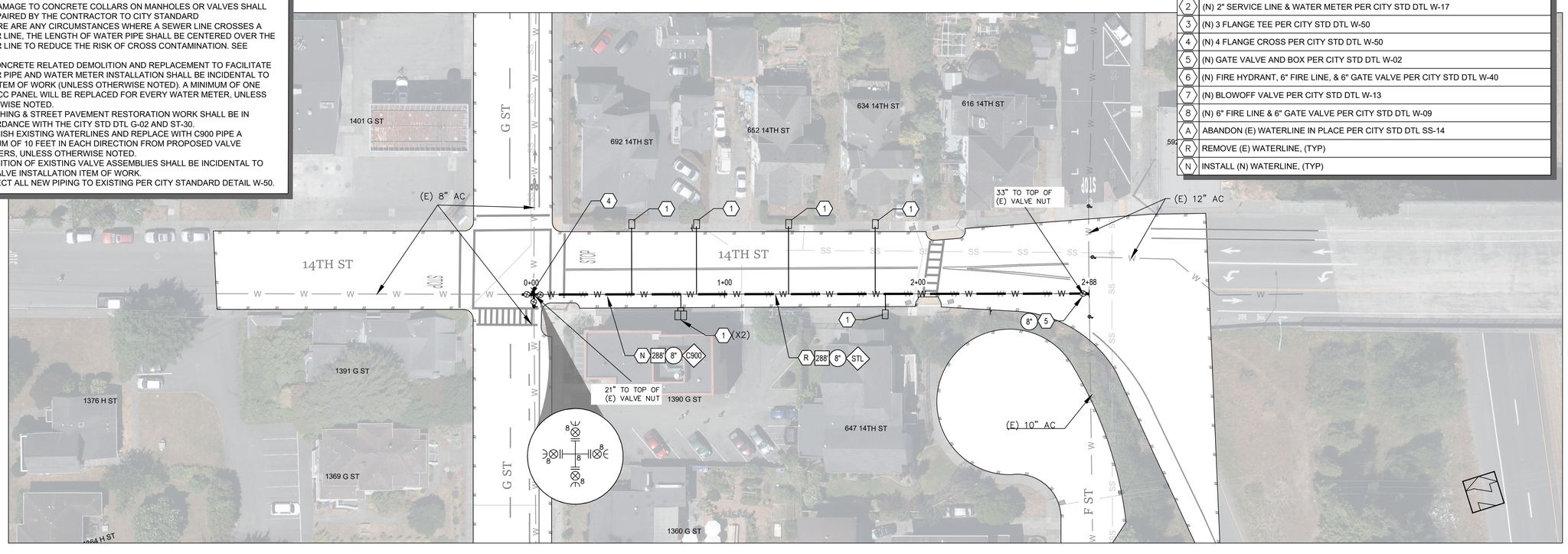

14TH ST – PLAN VIEW
STATION 0+00 TO 2+88

0 15 30 60 Feet

Sheet Title: ROSS ST & 14TH ST

Project Name: STEEL WATERLINE REPLACEMENT PROJECT

Project Address: VARIOUS LOCATIONS

Designed By: JONATHAN A. KIRCHUBEL

Drawn By: JONATHAN A. KIRCHUBEL

Checked By: DAVID CAISSE

Approved By: NETRA B. KHATRI

Date: JANUARY 2025

Sheet: C–109

Scale: 1"=30'

Page: 14

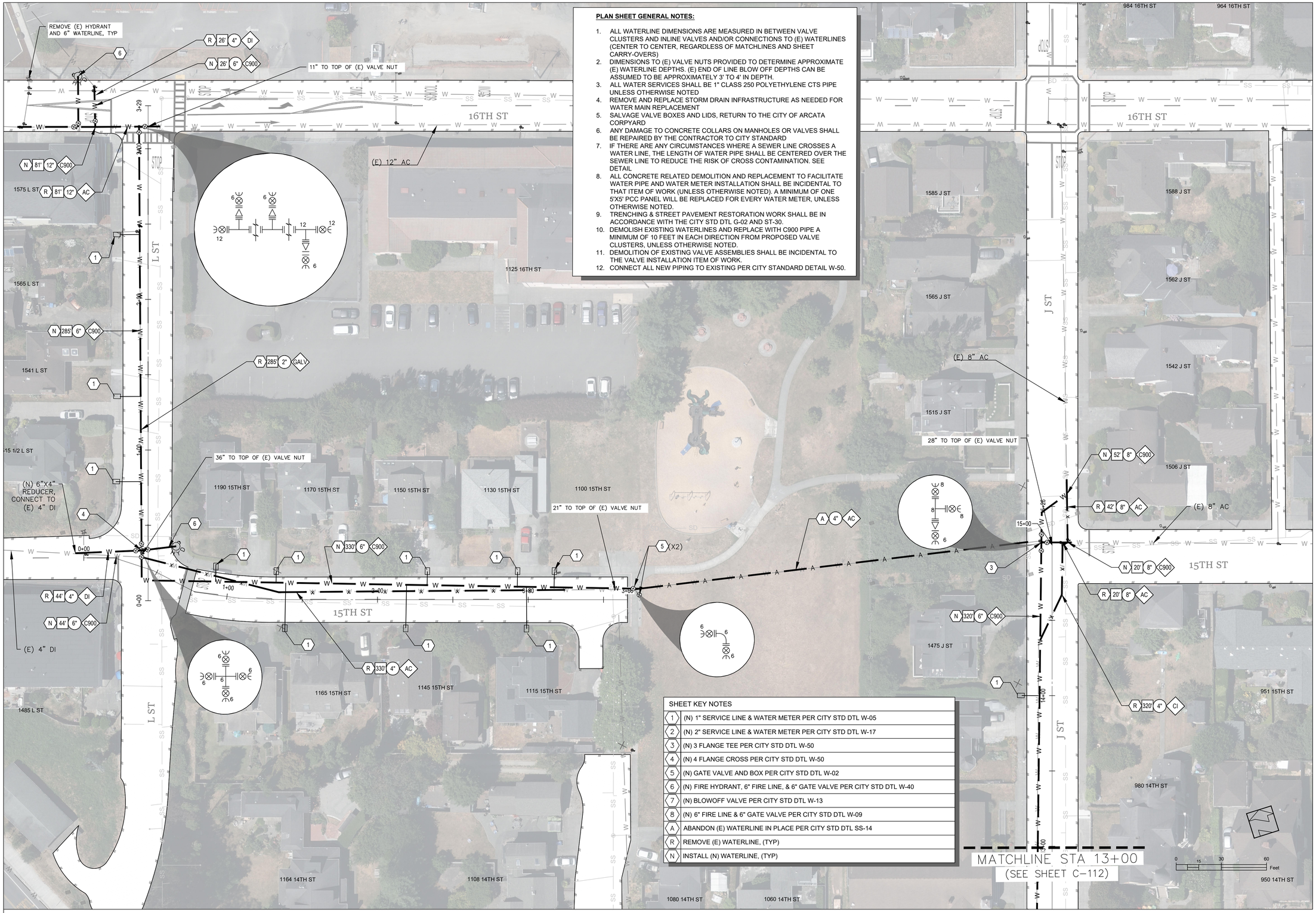

PLAN SHEET GENERAL NOTES:

1. ALL WATERLINE DIMENSIONS ARE MEASURED IN BETWEEN VALVE CLUSTERS AND INLINE VALVES AND/OR CONNECTIONS TO (E) WATERLINES (CENTER TO CENTER, REGARDLESS OF MATCHLINES AND SHEET CARRY-OVERS)
2. DIMENSIONS TO (E) VALVE NUTS PROVIDED TO DETERMINE APPROXIMATE (E) WATERLINE DEPTHS. (E) END OF LINE BLOW OFF DEPTHS CAN BE ASSUMED TO BE APPROXIMATELY 3' TO 4' IN DEPTH.
3. ALL WATER SERVICES SHALL BE 1" CLASS 250 POLYETHYLENE CTS PIPE UNLESS OTHERWISE NOTED
4. REMOVE AND REPLACE STORM DRAIN INFRASTRUCTURE AS NEEDED FOR WATER MAIN REPLACEMENT
5. SALVAGE VALVE BOXES AND LIDS, RETURN TO THE CITY OF ARCATA CORPYARD
6. ANY DAMAGE TO CONCRETE COLLARS ON MANHOLES OR VALVES SHALL BE REPAIRED BY THE CONTRACTOR TO CITY STANDARD
7. IF THERE ARE ANY CIRCUMSTANCES WHERE A SEWER LINE CROSSES A WATER LINE, THE LENGTH OF WATER PIPE SHALL BE CENTERED OVER THE SEWER LINE TO REDUCE THE RISK OF CROSS CONTAMINATION. SEE DETAIL
8. ALL CONCRETE RELATED DEMOLITION AND REPLACEMENT TO FACILITATE WATER PIPE AND WATER METER INSTALLATION SHALL BE INCIDENTAL TO THAT ITEM OF WORK (UNLESS OTHERWISE NOTED). A MINIMUM OF ONE 5'X5' PCC PANEL WILL BE REPLACED FOR EVERY WATER METER, UNLESS OTHERWISE NOTED.
9. TRENCHING & STREET PAVEMENT RESTORATION WORK SHALL BE IN ACCORDANCE WITH THE CITY STD DTL G-02 AND ST-30.
10. DEMOLISH EXISTING WATERLINES AND REPLACE WITH C900 PIPE A MINIMUM OF 10 FEET IN EACH DIRECTION FROM PROPOSED VALVE CLUSTERS, UNLESS OTHERWISE NOTED.
11. DEMOLITION OF EXISTING VALVE ASSEMBLIES SHALL BE INCIDENTAL TO THE VALVE INSTALLATION ITEM OF WORK.
12. CONNECT ALL NEW PIPING TO EXISTING PER CITY STANDARD DETAIL W-50.

SHEET KEY NOTES	
1	(N) 1" SERVICE LINE & WATER METER PER CITY STD DTL W-05
2	(N) 2" SERVICE LINE & WATER METER PER CITY STD DTL W-17
3	(N) 3 FLANGE TEE PER CITY STD DTL W-50
4	(N) 4 FLANGE CROSS PER CITY STD DTL W-50
5	(N) GATE VALVE AND BOX PER CITY STD DTL W-02
6	(N) FIRE HYDRANT, 6" FIRE LINE, & 6" GATE VALVE PER CITY STD DTL W-40
7	(N) BLOWOFF VALVE PER CITY STD DTL W-13
8	(N) 6" FIRE LINE & 6" GATE VALVE PER CITY STD DTL W-09
A	ABANDON (E) WATERLINE IN PLACE PER CITY STD DTL SS-14
R	REMOVE (E) WATERLINE, (TYP)
N	INSTALL (N) WATERLINE, (TYP)

L ST – PLAN VIEW
STATION 0+00 TO 3+29

15TH ST – PLAN VIEW
STATION 0+00 TO 3+66

J ST – PLAN VIEW
STATION 13+00 TO 15+26

REGISTERED PROFESSIONAL ENGINEER JON F. CAISSE No. C82962 CIVIL STATE OF CALIFORNIA

REGISTERED PROFESSIONAL ENGINEER NETRA KHATRI 75428 CIVIL STATE OF CALIFORNIA

City of ARCATA

Sheet Title
L ST, 16TH ST, 15TH, ST, & J ST

Project Name
STEEL WATERLINE REPLACEMENT PROJECT

Project Address
VARIOUS LOCATIONS

Designed By JONATHAN A. KIRCHUBEL
Drawn By JONATHAN A. KIRCHUBEL
Checked By DAVID CAISSE
Approved By NETRA B. KHATRI

Date	Sheet
JANUARY 2025	C-110
Scale 1"=30'	Page 15

SHEET KEY NOTES	
1	(N) 1" SERVICE LINE & WATER METER PER CITY STD DTL W-05
2	(N) 2" SERVICE LINE & WATER METER PER CITY STD DTL W-17
3	(N) 3 FLANGE TEE PER CITY STD DTL W-50
4	(N) 4 FLANGE CROSS PER CITY STD DTL W-50
5	(N) GATE VALVE AND BOX PER CITY STD DTL W-02
6	(N) FIRE HYDRANT, 6" FIRE LINE, & 6" GATE VALVE PER CITY STD DTL W-40
7	(N) BLOWOFF VALVE PER CITY STD DTL W-13
8	(N) 6" FIRE LINE & 6" GATE VALVE PER CITY STD DTL W-09
A	ABANDON (E) WATERLINE IN PLACE PER CITY STD DTL SS-14
R	REMOVE (E) WATERLINE, (TYP)
N	INSTALL (N) WATERLINE, (TYP)

PLAN SHEET GENERAL NOTES:

1. ALL WATERLINE DIMENSIONS ARE MEASURED IN BETWEEN VALVE CLUSTERS AND INLINE VALVES AND/OR CONNECTIONS TO (E) WATERLINES (CENTER TO CENTER, REGARDLESS OF MATCHLINES AND SHEET CARRY-OVERS)
2. DIMENSIONS TO (E) VALVE NUTS PROVIDED TO DETERMINE APPROXIMATE (E) WATERLINE DEPTHS. (E) END OF LINE BLOW OFF DEPTHS CAN BE ASSUMED TO BE APPROXIMATELY 3' TO 4' IN DEPTH.
3. ALL WATER SERVICES SHALL BE 1" CLASS 250 POLYETHYLENE CTS PIPE UNLESS OTHERWISE NOTED
4. REMOVE AND REPLACE STORM DRAIN INFRASTRUCTURE AS NEEDED FOR WATER MAIN REPLACEMENT
5. SALVAGE VALVE BOXES AND LIDS, RETURN TO THE CITY OF ARCATA CORPYARD
6. ANY DAMAGE TO CONCRETE COLLARS ON MANHOLES OR VALVES SHALL BE REPAIRED BY THE CONTRACTOR TO CITY STANDARD
7. IF THERE ARE ANY CIRCUMSTANCES WHERE A SEWER LINE CROSSES A WATER LINE, THE LENGTH OF WATER PIPE SHALL BE CENTERED OVER THE SEWER LINE TO REDUCE THE RISK OF CROSS CONTAMINATION. SEE DETAIL
8. ALL CONCRETE RELATED DEMOLITION AND REPLACEMENT TO FACILITATE WATER PIPE AND WATER METER INSTALLATION SHALL BE INCIDENTAL TO THAT ITEM OF WORK (UNLESS OTHERWISE NOTED). A MINIMUM OF ONE 5'X5' PCC PANEL WILL BE REPLACED FOR EVERY WATER METER, UNLESS OTHERWISE NOTED.
9. TRENCHING & STREET PAVEMENT RESTORATION WORK SHALL BE IN ACCORDANCE WITH THE CITY STD DTL G-02 AND ST-30.
10. DEMOLISH EXISTING WATERLINES AND REPLACE WITH C900 PIPE A MINIMUM OF 10 FEET IN EACH DIRECTION FROM PROPOSED VALVE CLUSTERS, UNLESS OTHERWISE NOTED.
11. DEMOLITION OF EXISTING VALVE ASSEMBLIES SHALL BE INCIDENTAL TO THE VALVE INSTALLATION ITEM OF WORK.
12. CONNECT ALL NEW PIPING TO EXISTING PER CITY STANDARD DETAIL W-50.

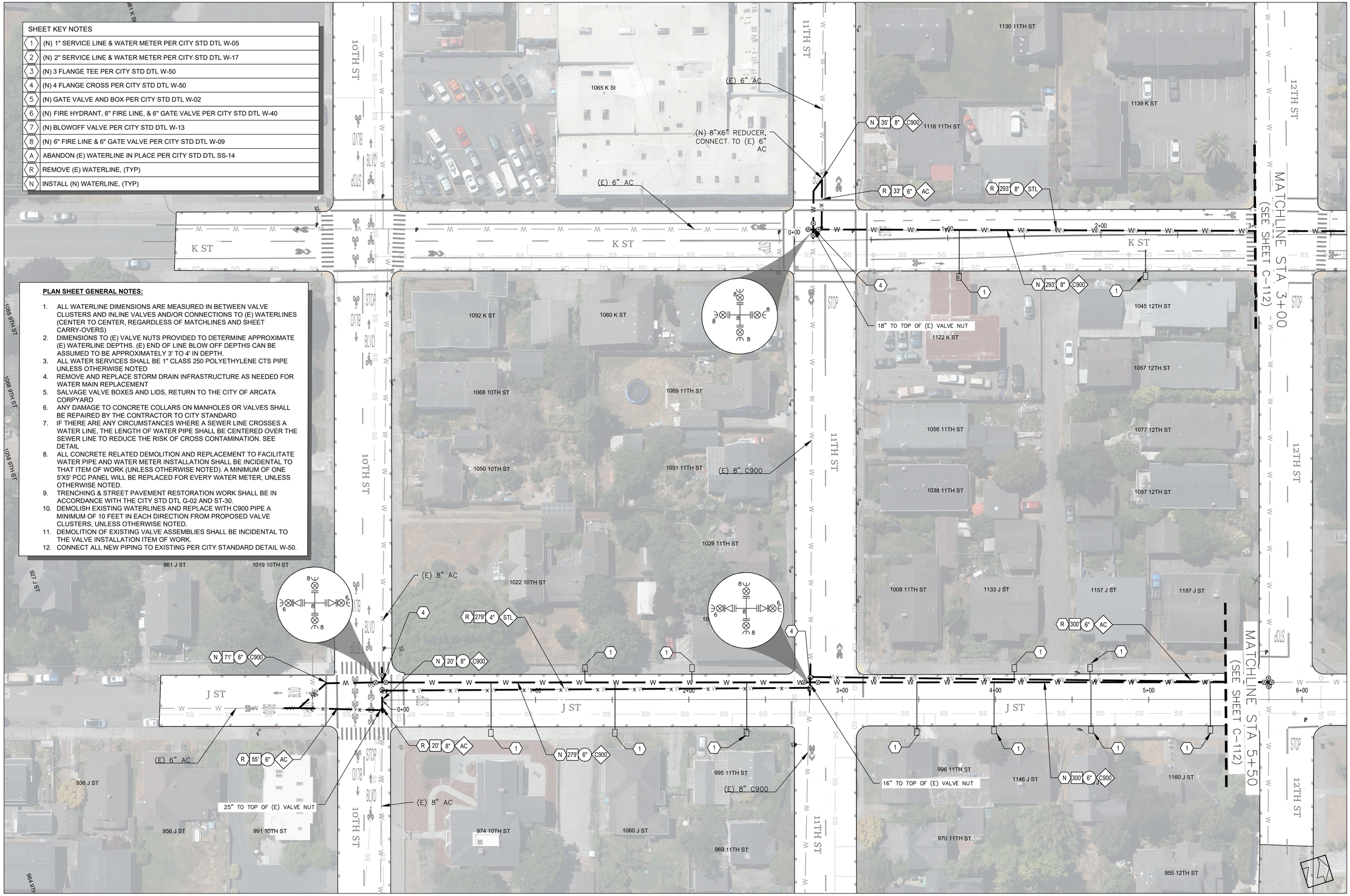

J ST – PLAN VIEW
STATION 0+00 TO 5+50

K ST – PLAN VIEW
STATION 0+00 TO 3+00

0 15 30 60 Feet

REGISTERED PROFESSIONAL ENGINEER JOHN F. CAISSE No. C80962 CIVIL STATE OF CALIFORNIA

REGISTERED PROFESSIONAL ENGINEER NETRA KHATRI 75428 CIVIL STATE OF CALIFORNIA

City of ARCATA

Sheet Title: J ST & K ST

Project Name: STEEL WATERLINE REPLACEMENT PROJECT

Project Address: VARIOUS LOCATIONS

Designed By: JONATHAN A. KIRCHUBEL
Drawn By: JONATHAN A. KIRCHUBEL
Checked By: DAVID CAISSE
Approved By: NETRA B. KHATRI

Date: JANUARY 2025
Sheet: C-111
Scale: 1"=30'
Page: 16

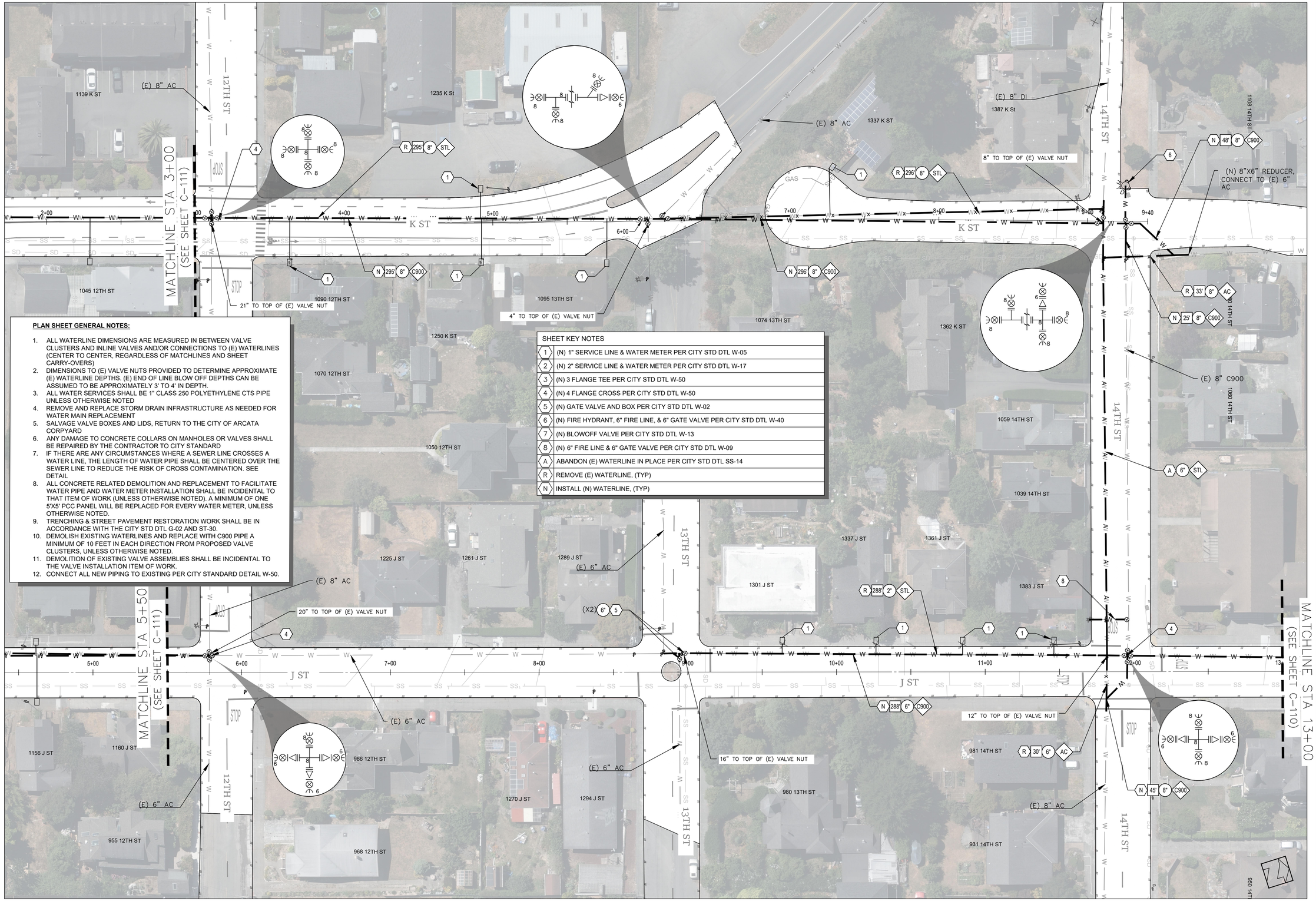

PLAN SHEET GENERAL NOTES:

1. ALL WATERLINE DIMENSIONS ARE MEASURED IN BETWEEN VALVE CLUSTERS AND INLINE VALVES AND/OR CONNECTIONS TO (E) WATERLINES (CENTER TO CENTER, REGARDLESS OF MATCHLINES AND SHEET CARRY-OVERS)
2. DIMENSIONS TO (E) VALVE NUTS PROVIDED TO DETERMINE APPROXIMATE (E) WATERLINE DEPTHS. (E) END OF LINE BLOW OFF DEPTHS CAN BE ASSUMED TO BE APPROXIMATELY 3' TO 4' IN DEPTH.
3. ALL WATER SERVICES SHALL BE 1" CLASS 250 POLYETHYLENE CTS PIPE UNLESS OTHERWISE NOTED
4. REMOVE AND REPLACE STORM DRAIN INFRASTRUCTURE AS NEEDED FOR WATER MAIN REPLACEMENT
5. SALVAGE VALVE BOXES AND LIDS, RETURN TO THE CITY OF ARCATA CORPYARD
6. ANY DAMAGE TO CONCRETE COLLARS ON MANHOLES OR VALVES SHALL BE REPAIRED BY THE CONTRACTOR TO CITY STANDARD
7. IF THERE ARE ANY CIRCUMSTANCES WHERE A SEWER LINE CROSSES A WATER LINE, THE LENGTH OF WATER PIPE SHALL BE CENTERED OVER THE SEWER LINE TO REDUCE THE RISK OF CROSS CONTAMINATION. SEE DETAIL
8. ALL CONCRETE RELATED DEMOLITION AND REPLACEMENT TO FACILITATE WATER PIPE AND WATER METER INSTALLATION SHALL BE INCIDENTAL TO THAT ITEM OF WORK (UNLESS OTHERWISE NOTED). A MINIMUM OF ONE 5'X5' PCC PANEL WILL BE REPLACED FOR EVERY WATER METER, UNLESS OTHERWISE NOTED.
9. TRENCHING & STREET PAVEMENT RESTORATION WORK SHALL BE IN ACCORDANCE WITH THE CITY STD DTL G-02 AND ST-30.
10. DEMOLISH EXISTING WATERLINES AND REPLACE WITH C900 PIPE A MINIMUM OF 10 FEET IN EACH DIRECTION FROM PROPOSED VALVE CLUSTERS, UNLESS OTHERWISE NOTED.
11. DEMOLITION OF EXISTING VALVE ASSEMBLIES SHALL BE INCIDENTAL TO THE VALVE INSTALLATION ITEM OF WORK.
12. CONNECT ALL NEW PIPING TO EXISTING PER CITY STANDARD DETAIL W-50.

SHEET KEY NOTES

1	(N) 1" SERVICE LINE & WATER METER PER CITY STD DTL W-05
2	(N) 2" SERVICE LINE & WATER METER PER CITY STD DTL W-17
3	(N) 3 FLANGE TEE PER CITY STD DTL W-50
4	(N) 4 FLANGE CROSS PER CITY STD DTL W-50
5	(N) GATE VALVE AND BOX PER CITY STD DTL W-02
6	(N) FIRE HYDRANT, 6" FIRE LINE, & 6" GATE VALVE PER CITY STD DTL W-40
7	(N) BLOWOFF VALVE PER CITY STD DTL W-13
8	(N) 6" FIRE LINE & 6" GATE VALVE PER CITY STD DTL W-09
A	ABANDON (E) WATERLINE IN PLACE PER CITY STD DTL SS-14
R	REMOVE (E) WATERLINE, (TYP)
N	INSTALL (N) WATERLINE, (TYP)

J ST – PLAN VIEW
STATION 5+50 TO 13+00

K ST – PLAN VIEW
STATION 3+00 TO 9+40

REGISTERED PROFESSIONAL ENGINEER
DAVID F. CAISSE
No. C80962
CIVIL
STATE OF CALIFORNIA

REGISTERED PROFESSIONAL ENGINEER
NETRA KHATRI
75428
CIVIL
STATE OF CALIFORNIA

City of ARCATA

Sheet Title: J ST & K ST

Project Name: STEEL WATERLINE REPLACEMENT PROJECT

Project Address: VARIOUS LOCATIONS

Designed By	JONATHAN A. KIRCHUBEL
Drawn By	JONATHAN A. KIRCHUBEL
Checked By	DAVID CAISSE
Approved By	NETRA B. KHATRI
Date	JANUARY 2025
Sheet	C-112
Scale	1"=30'
Page	17

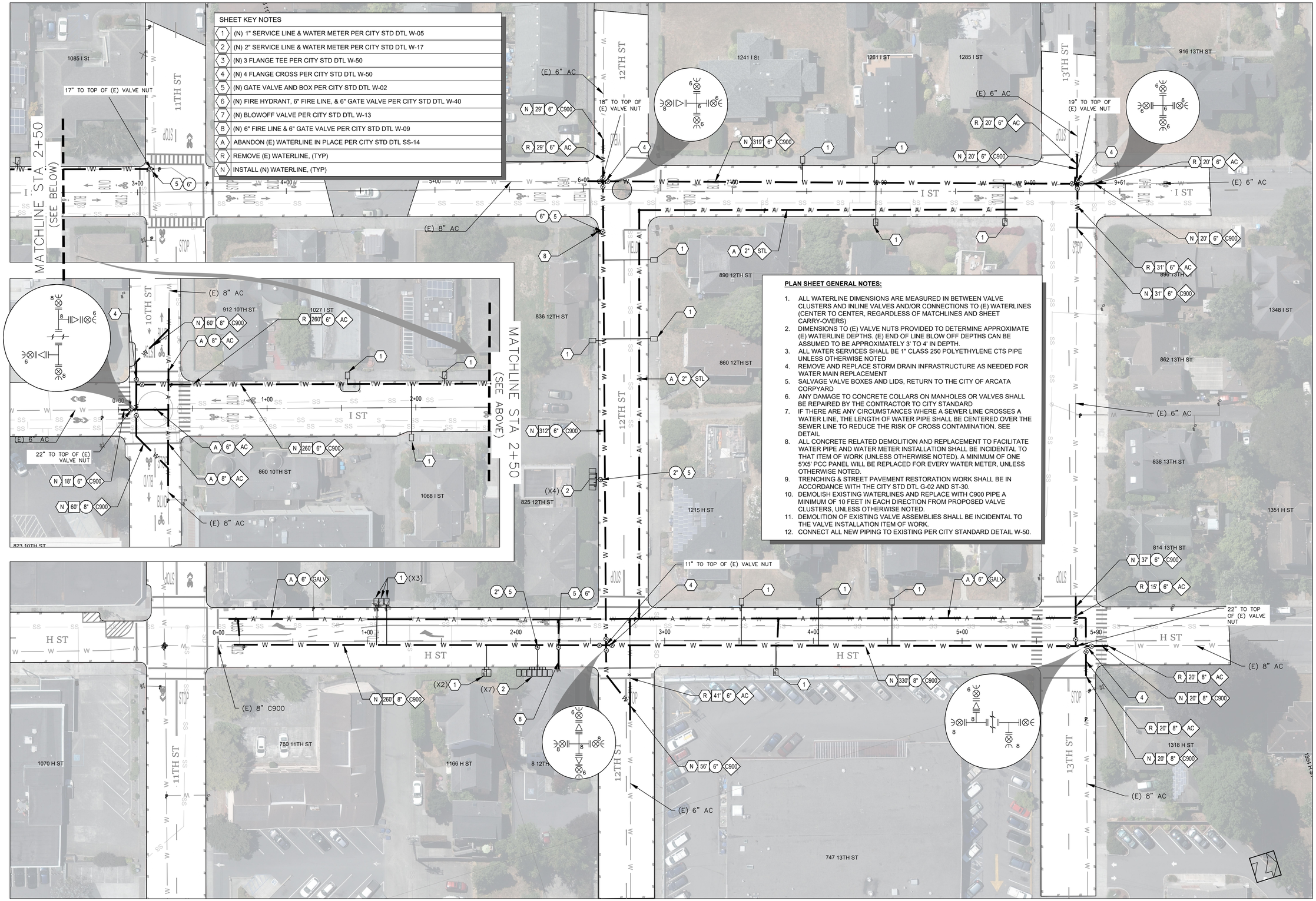

SHEET KEY NOTES

1	(N) 1" SERVICE LINE & WATER METER PER CITY STD DTL W-05
2	(N) 2" SERVICE LINE & WATER METER PER CITY STD DTL W-17
3	(N) 3 FLANGE TEE PER CITY STD DTL W-50
4	(N) 4 FLANGE CROSS PER CITY STD DTL W-50
5	(N) GATE VALVE AND BOX PER CITY STD DTL W-02
6	(N) FIRE HYDRANT, 6" FIRE LINE, & 6" GATE VALVE PER CITY STD DTL W-40
7	(N) BLOWOFF VALVE PER CITY STD DTL W-13
8	(N) 6" FIRE LINE & 6" GATE VALVE PER CITY STD DTL W-09
A	ABANDON (E) WATERLINE IN PLACE PER CITY STD DTL SS-14
R	REMOVE (E) WATERLINE, (TYP)
N	INSTALL (N) WATERLINE, (TYP)

PLAN SHEET GENERAL NOTES:

1. ALL WATERLINE DIMENSIONS ARE MEASURED IN BETWEEN VALVE CLUSTERS AND INLINE VALVES AND/OR CONNECTIONS TO (E) WATERLINES (CENTER TO CENTER, REGARDLESS OF MATCHLINES AND SHEET CARRY-OVERS)
2. DIMENSIONS TO (E) VALVE NUTS PROVIDED TO DETERMINE APPROXIMATE (E) WATERLINE DEPTHS. (E) END OF LINE BLOW OFF DEPTHS CAN BE ASSUMED TO BE APPROXIMATELY 3' TO 4' IN DEPTH.
3. ALL WATER SERVICES SHALL BE 1" CLASS 250 POLYETHYLENE CTS PIPE UNLESS OTHERWISE NOTED
4. REMOVE AND REPLACE STORM DRAIN INFRASTRUCTURE AS NEEDED FOR WATER MAIN REPLACEMENT
5. SALVAGE VALVE BOXES AND LIDS, RETURN TO THE CITY OF ARCATA CORPYARD
6. ANY DAMAGE TO CONCRETE COLLARS ON MANHOLES OR VALVES SHALL BE REPAIRED BY THE CONTRACTOR TO CITY STANDARD
7. IF THERE ARE ANY CIRCUMSTANCES WHERE A SEWER LINE CROSSES A WATER LINE, THE LENGTH OF WATER PIPE SHALL BE CENTERED OVER THE SEWER LINE TO REDUCE THE RISK OF CROSS CONTAMINATION. SEE DETAIL
8. ALL CONCRETE RELATED DEMOLITION AND REPLACEMENT TO FACILITATE WATER PIPE AND WATER METER INSTALLATION SHALL BE INCIDENTAL TO THAT ITEM OF WORK (UNLESS OTHERWISE NOTED). A MINIMUM OF ONE 5'X5' PCC PANEL WILL BE REPLACED FOR EVERY WATER METER, UNLESS OTHERWISE NOTED.
9. TRENCHING & STREET PAVEMENT RESTORATION WORK SHALL BE IN ACCORDANCE WITH THE CITY STD DTL G-02 AND ST-30.
10. DEMOLISH EXISTING WATERLINES AND REPLACE WITH C900 PIPE A MINIMUM OF 10 FEET IN EACH DIRECTION FROM PROPOSED VALVE CLUSTERS, UNLESS OTHERWISE NOTED.
11. DEMOLITION OF EXISTING VALVE ASSEMBLIES SHALL BE INCIDENTAL TO THE VALVE INSTALLATION ITEM OF WORK.
12. CONNECT ALL NEW PIPING TO EXISTING PER CITY STANDARD DETAIL W-50.

H ST – PLAN VIEW
STATION 0+00 TO 5+90

I ST – PLAN VIEW
STATION 0+00 TO 9+61

0 15 30 60 Feet

REGISTERED PROFESSIONAL ENGINEER JON F. CAISSE No. C82962 CIVIL STATE OF CALIFORNIA

REGISTERED PROFESSIONAL ENGINEER NETRA KHATRI 75428 CIVIL STATE OF CALIFORNIA

City of ARCATA

Sheet Title: H ST & I ST

Project Name: STEEL WATERLINE REPLACEMENT PROJECT

Project Address: VARIOUS LOCATIONS

Designed By: JONATHAN A. KIRCHUBEL

Drawn By: JONATHAN A. KIRCHUBEL

Checked By: DAVID CAISSE

Approved By: NETRA B. KHATRI

Date: JANUARY 2025

Sheet: C-113

Scale: 1"=30'

Page: 18

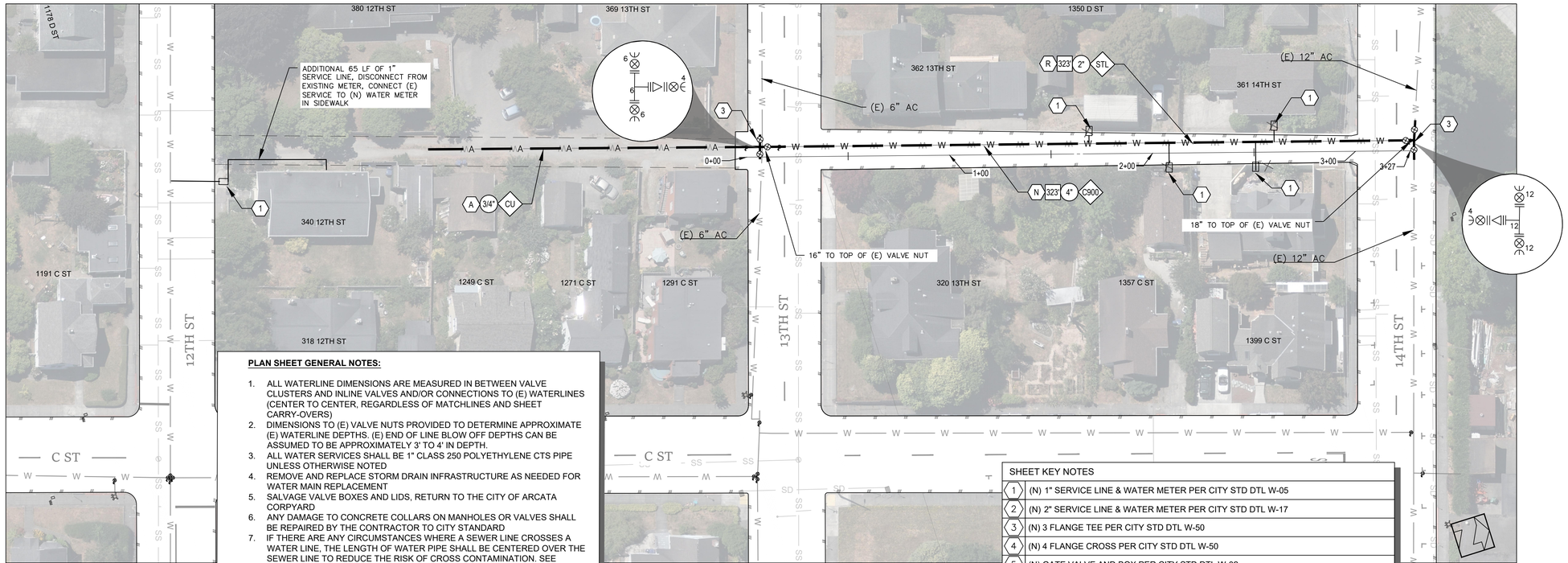

PLAN SHEET GENERAL NOTES:

1. ALL WATERLINE DIMENSIONS ARE MEASURED IN BETWEEN VALVE CLUSTERS AND INLINE VALVES AND/OR CONNECTIONS TO (E) WATERLINES (CENTER TO CENTER, REGARDLESS OF MATCHLINES AND SHEET CARRY-OVERS)
2. DIMENSIONS TO (E) VALVE NUTS PROVIDED TO DETERMINE APPROXIMATE (E) WATERLINE DEPTHS. (E) END OF LINE BLOW OFF DEPTHS CAN BE ASSUMED TO BE APPROXIMATELY 3' TO 4' IN DEPTH.
3. ALL WATER SERVICES SHALL BE 1" CLASS 250 POLYETHYLENE CTS PIPE UNLESS OTHERWISE NOTED
4. REMOVE AND REPLACE STORM DRAIN INFRASTRUCTURE AS NEEDED FOR WATER MAIN REPLACEMENT
5. SALVAGE VALVE BOXES AND LIDS, RETURN TO THE CITY OF ARCATA CORPYARD
6. ANY DAMAGE TO CONCRETE COLLARS ON MANHOLES OR VALVES SHALL BE REPAIRED BY THE CONTRACTOR TO CITY STANDARD
7. IF THERE ARE ANY CIRCUMSTANCES WHERE A SEWER LINE CROSSES A WATER LINE, THE LENGTH OF WATER PIPE SHALL BE CENTERED OVER THE SEWER LINE TO REDUCE THE RISK OF CROSS CONTAMINATION. SEE DETAIL
8. ALL CONCRETE RELATED DEMOLITION AND REPLACEMENT TO FACILITATE WATER PIPE AND WATER METER INSTALLATION SHALL BE INCIDENTAL TO THAT ITEM OF WORK (UNLESS OTHERWISE NOTED). A MINIMUM OF ONE 5'X5' PCC PANEL WILL BE REPLACED FOR EVERY WATER METER, UNLESS OTHERWISE NOTED.
9. TRENCHING & STREET PAVEMENT RESTORATION WORK SHALL BE IN ACCORDANCE WITH THE CITY STD DTL G-02 AND ST-30.
10. DEMOLISH EXISTING WATERLINES AND REPLACE WITH C900 PIPE A MINIMUM OF 10 FEET IN EACH DIRECTION FROM PROPOSED VALVE CLUSTERS, UNLESS OTHERWISE NOTED.
11. DEMOLITION OF EXISTING VALVE ASSEMBLIES SHALL BE INCIDENTAL TO THE VALVE INSTALLATION ITEM OF WORK.
12. CONNECT ALL NEW PIPING TO EXISTING PER CITY STANDARD DETAIL W-50.

SHEET KEY NOTES	
1	(N) 1" SERVICE LINE & WATER METER PER CITY STD DTL W-05
2	(N) 2" SERVICE LINE & WATER METER PER CITY STD DTL W-17
3	(N) 3 FLANGE TEE PER CITY STD DTL W-50
4	(N) 4 FLANGE CROSS PER CITY STD DTL W-50
5	(N) GATE VALVE AND BOX PER CITY STD DTL W-02
6	(N) FIRE HYDRANT, 6" FIRE LINE, & 6" GATE VALVE PER CITY STD DTL W-40
7	(N) BLOWOFF VALVE PER CITY STD DTL W-13
8	(N) 6" FIRE LINE & 6" GATE VALVE PER CITY STD DTL W-09
A	ABANDON (E) WATERLINE IN PLACE PER CITY STD DTL SS-14
R	REMOVE (E) WATERLINE, (TYP)
N	INSTALL (N) WATERLINE, (TYP)

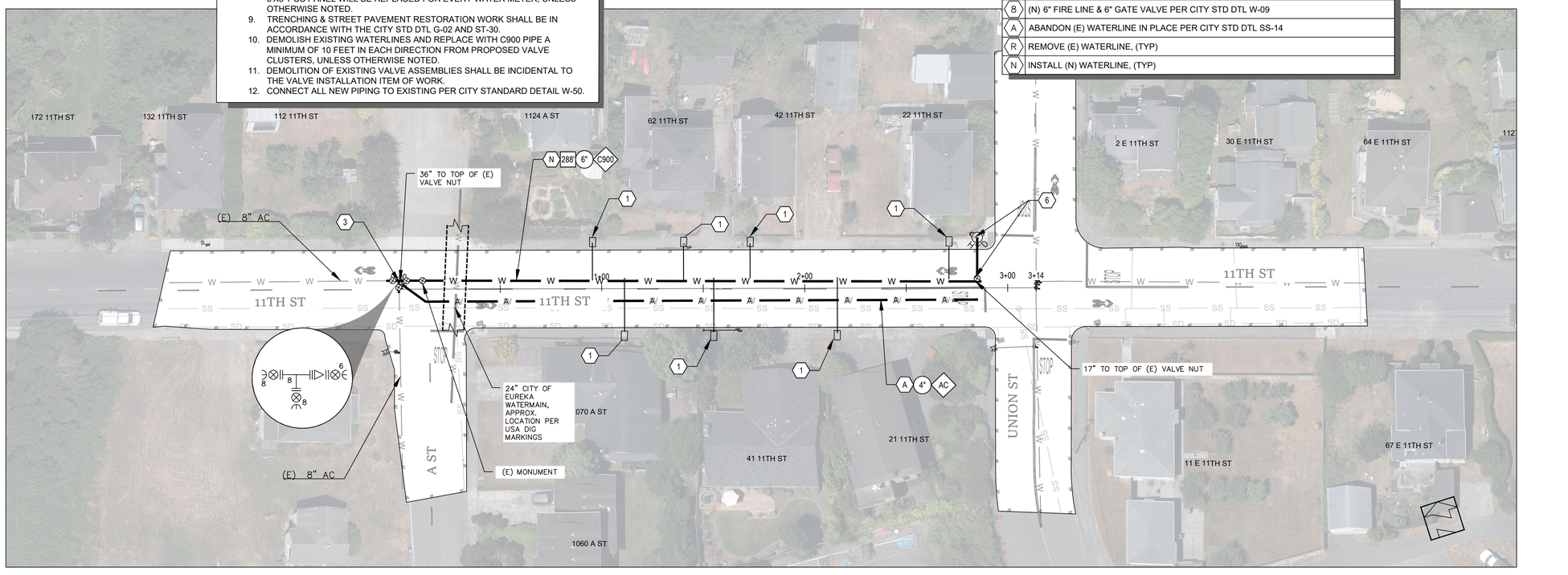

11TH ST – PLAN VIEW
STATION 0+00 TO 3+14

ALLEY (B/T 13TH & 14TH) – PLAN VIEW
STATION 0+00 TO 3+27

0 15 30 60 Feet

REGISTERED PROFESSIONAL ENGINEER DAVID F. CAISSE No. C63962 CIVIL STATE OF CALIFORNIA

REGISTERED PROFESSIONAL ENGINEER NETRA KHATRI 75428 CIVIL STATE OF CALIFORNIA

City of ARCATA

Sheet Title: 11TH ST & ALLEY (B/T 13TH & 14TH)

Project Name: STEEL WATERLINE REPLACEMENT PROJECT

Project Address: VARIOUS LOCATIONS

Designed By: JONATHAN A. KIRCHUBEL
Drawn By: JONATHAN A. KIRCHUBEL
Checked By: DAVID CAISSE
Approved By: NETRA B. KHATRI

Date: JANUARY 2025
Sheet: C-114
Scale: 1"=30'
Page: 19

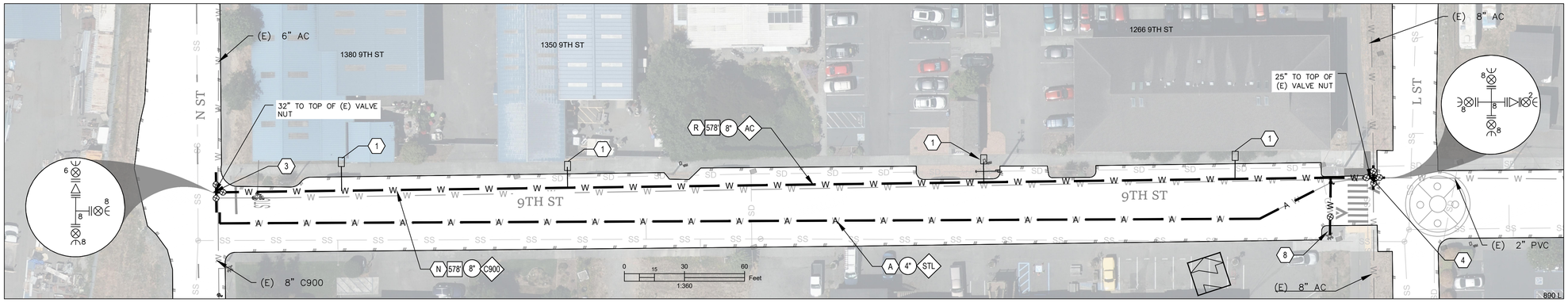

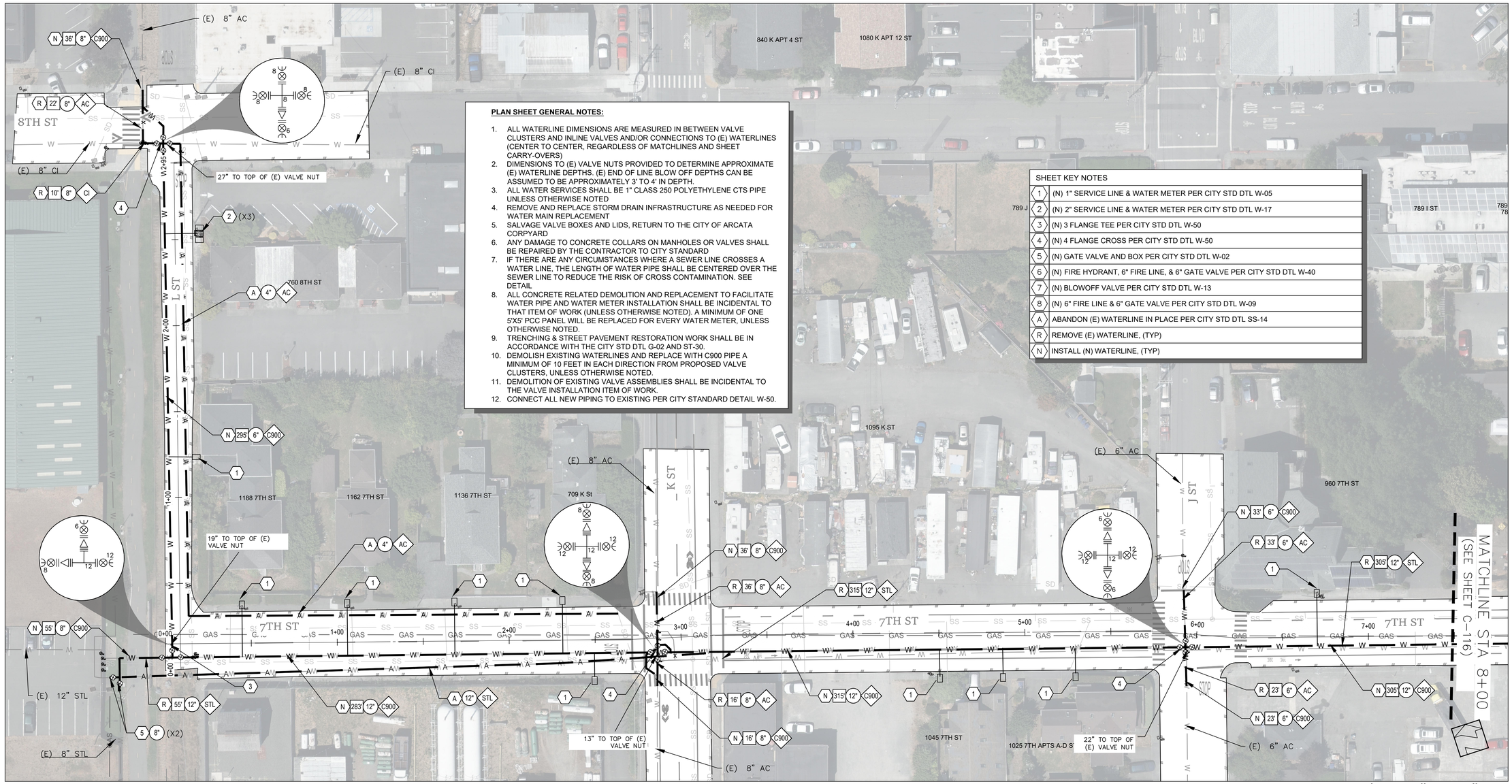

PLAN SHEET GENERAL NOTES:

1. ALL WATERLINE DIMENSIONS ARE MEASURED IN BETWEEN VALVE CLUSTERS AND INLINE VALVES AND/OR CONNECTIONS TO (E) WATERLINES (CENTER TO CENTER, REGARDLESS OF MATCHLINES AND SHEET CARRY-OVERS)
2. DIMENSIONS TO (E) VALVE NUTS PROVIDED TO DETERMINE APPROXIMATE (E) WATERLINE DEPTHS. (E) END OF LINE BLOW OFF DEPTHS CAN BE ASSUMED TO BE APPROXIMATELY 3' TO 4' IN DEPTH.
3. ALL WATER SERVICES SHALL BE 1" CLASS 250 POLYETHYLENE CTS PIPE UNLESS OTHERWISE NOTED
4. REMOVE AND REPLACE STORM DRAIN INFRASTRUCTURE AS NEEDED FOR WATER MAIN REPLACEMENT
5. SALVAGE VALVE BOXES AND LIDS, RETURN TO THE CITY OF ARCATA CORPYARD
6. ANY DAMAGE TO CONCRETE COLLARS ON MANHOLES OR VALVES SHALL BE REPAIRED BY THE CONTRACTOR TO CITY STANDARD
7. IF THERE ARE ANY CIRCUMSTANCES WHERE A SEWER LINE CROSSES A WATER LINE, THE LENGTH OF WATER PIPE SHALL BE CENTERED OVER THE SEWER LINE TO REDUCE THE RISK OF CROSS CONTAMINATION. SEE DETAIL
8. ALL CONCRETE RELATED DEMOLITION AND REPLACEMENT TO FACILITATE WATER PIPE AND WATER METER INSTALLATION SHALL BE INCIDENTAL TO THAT ITEM OF WORK (UNLESS OTHERWISE NOTED). A MINIMUM OF ONE 5'X5' PCC PANEL WILL BE REPLACED FOR EVERY WATER METER, UNLESS OTHERWISE NOTED.
9. TRENCHING & STREET PAVEMENT RESTORATION WORK SHALL BE IN ACCORDANCE WITH THE CITY STD DTL G-02 AND ST-30.
10. DEMOLISH EXISTING WATERLINES AND REPLACE WITH C900 PIPE A MINIMUM OF 10 FEET IN EACH DIRECTION FROM PROPOSED VALVE CLUSTERS, UNLESS OTHERWISE NOTED.
11. DEMOLITION OF EXISTING VALVE ASSEMBLIES SHALL BE INCIDENTAL TO THE VALVE INSTALLATION ITEM OF WORK.
12. CONNECT ALL NEW PIPING TO EXISTING PER CITY STANDARD DETAIL W-50.

SHEET KEY NOTES

1	(N) 1" SERVICE LINE & WATER METER PER CITY STD DTL W-05
2	(N) 2" SERVICE LINE & WATER METER PER CITY STD DTL W-17
3	(N) 3 FLANGE TEE PER CITY STD DTL W-50
4	(N) 4 FLANGE CROSS PER CITY STD DTL W-50
5	(N) GATE VALVE AND BOX PER CITY STD DTL W-02
6	(N) FIRE HYDRANT, 6" FIRE LINE, & 6" GATE VALVE PER CITY STD DTL W-40
7	(N) BLOWOFF VALVE PER CITY STD DTL W-13
8	(N) 6" FIRE LINE & 6" GATE VALVE PER CITY STD DTL W-09
A	ABANDON (E) WATERLINE IN PLACE PER CITY STD DTL SS-14
R	REMOVE (E) WATERLINE, (TYP)
N	INSTALL (N) WATERLINE, (TYP)

9TH ST – PLAN VIEW
STATION 0+00 TO 6+11

L ST – PLAN VIEW
STATION 0+00 TO 2+95

7TH ST – PLAN VIEW
STATION 0+00 TO 7+50

REGISTERED PROFESSIONAL ENGINEER DAVID F. CAISSE No. C80962 CIVIL STATE OF CALIFORNIA

REGISTERED PROFESSIONAL ENGINEER NETRA KHATRI 75428 CIVIL STATE OF CALIFORNIA

City of ARCATA

Sheet Title: 9TH ST, L ST, & 7TH ST

Project Name: STEEL WATERLINE REPLACEMENT PROJECT

Project Address: VARIOUS LOCATIONS

Designed By: JONATHAN A. KIRCHUBEL

Drawn By: JONATHAN A. KIRCHUBEL

Checked By: DAVID CAISSE

Approved By: NETRA B. KHATRI

Date: JANUARY 2025

Sheet: C-115

Scale: 1"=30'

Page: 20

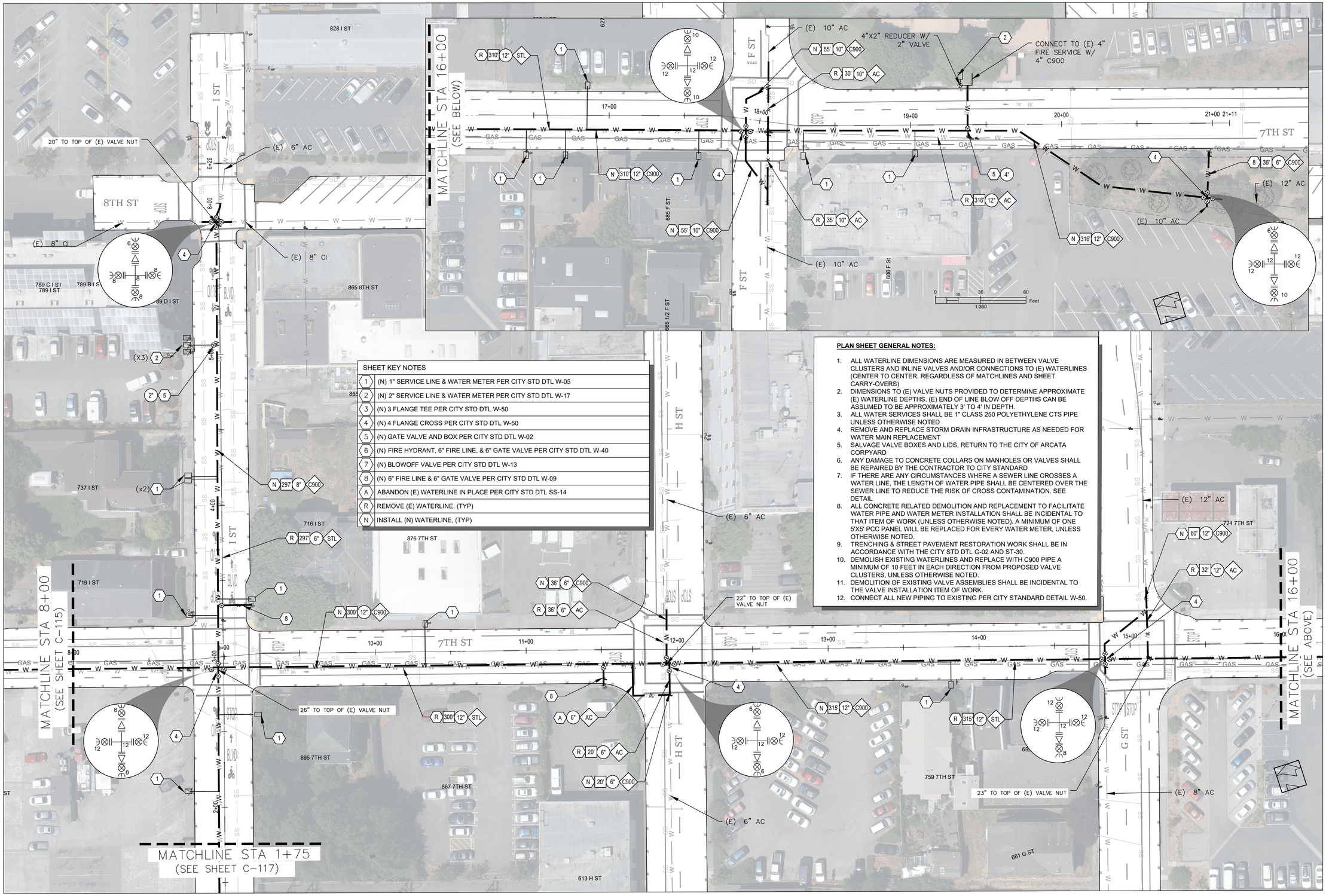

SHEET KEY NOTES	
1	(N) 1" SERVICE LINE & WATER METER PER CITY STD DTL W-05
2	(N) 2" SERVICE LINE & WATER METER PER CITY STD DTL W-17
3	(N) 3 FLANGE TEE PER CITY STD DTL W-50
4	(N) 4 FLANGE CROSS PER CITY STD DTL W-50
5	(N) GATE VALVE AND BOX PER CITY STD DTL W-02
6	(N) FIRE HYDRANT, 6" FIRE LINE, & 6" GATE VALVE PER CITY STD DTL W-40
7	(N) BLOWOFF VALVE PER CITY STD DTL W-13
8	(N) 6" FIRE LINE & 6" GATE VALVE PER CITY STD DTL W-09
A	ABANDON (E) WATERLINE IN PLACE PER CITY STD DTL SS-14
R	REMOVE (E) WATERLINE, (TYP)
N	INSTALL (N) WATERLINE, (TYP)

PLAN SHEET GENERAL NOTES:

1. ALL WATERLINE DIMENSIONS ARE MEASURED IN BETWEEN VALVE CLUSTERS AND INLINE VALVES AND/OR CONNECTIONS TO (E) WATERLINES (CENTER TO CENTER, REGARDLESS OF MATCHLINES AND SHEET CARRY-OVERS)
2. DIMENSIONS TO (E) VALVE NUTS PROVIDED TO DETERMINE APPROXIMATE (E) WATERLINE DEPTHS. (E) END OF LINE BLOW OFF DEPTHS CAN BE ASSUMED TO BE APPROXIMATELY 3' TO 4' IN DEPTH.
3. ALL WATER SERVICES SHALL BE 1" CLASS 250 POLYETHYLENE CTS PIPE UNLESS OTHERWISE NOTED
4. REMOVE AND REPLACE STORM DRAIN INFRASTRUCTURE AS NEEDED FOR WATER MAIN REPLACEMENT
5. SALVAGE VALVE BOXES AND LIDS, RETURN TO THE CITY OF ARCATA CORPYARD
6. ANY DAMAGE TO CONCRETE COLLARS ON MANHOLES OR VALVES SHALL BE REPAIRED BY THE CONTRACTOR TO CITY STANDARD
7. IF THERE ARE ANY CIRCUMSTANCES WHERE A SEWER LINE CROSSES A WATER LINE, THE LENGTH OF WATER PIPE SHALL BE CENTERED OVER THE SEWER LINE TO REDUCE THE RISK OF CROSS CONTAMINATION. SEE DETAIL
8. ALL CONCRETE RELATED DEMOLITION AND REPLACEMENT TO FACILITATE WATER PIPE AND WATER METER INSTALLATION SHALL BE INCIDENTAL TO THAT ITEM OF WORK (UNLESS OTHERWISE NOTED). A MINIMUM OF ONE 5'X5' PCC PANEL WILL BE REPLACED FOR EVERY WATER METER, UNLESS OTHERWISE NOTED.
9. TRENCHING & STREET PAVEMENT RESTORATION WORK SHALL BE IN ACCORDANCE WITH THE CITY STD DTL G-02 AND ST-30.
10. DEMOLISH EXISTING WATERLINES AND REPLACE WITH C900 PIPE A MINIMUM OF 10 FEET IN EACH DIRECTION FROM PROPOSED VALVE CLUSTERS, UNLESS OTHERWISE NOTED.
11. DEMOLITION OF EXISTING VALVE ASSEMBLIES SHALL BE INCIDENTAL TO THE VALVE INSTALLATION ITEM OF WORK.
12. CONNECT ALL NEW PIPING TO EXISTING PER CITY STANDARD DETAIL W-50.

I ST – PLAN VIEW
STATION 1+75 TO 6+26

7TH ST – PLAN VIEW
STATION 8+00 TO 21+11

0 15 30 60 Feet

REGISTERED PROFESSIONAL ENGINEER JON F. CAISSE No. C82962 CIVIL STATE OF CALIFORNIA

REGISTERED PROFESSIONAL ENGINEER NETRA KHATRI 75428 CIVIL STATE OF CALIFORNIA

City of ARCATA

Sheet Title: I ST & 7TH ST

Project Name: STEEL WATERLINE REPLACEMENT PROJECT

Project Address: VARIOUS LOCATIONS

Designed By: JONATHAN A. KIRCHUBEL

Drawn By: JONATHAN A. KIRCHUBEL

Checked By: DAVID CAISSE

Approved By: NETRA B. KHATRI

Date: JANUARY 2025

Sheet: C–116

Scale: 1"=30'

Page: 21

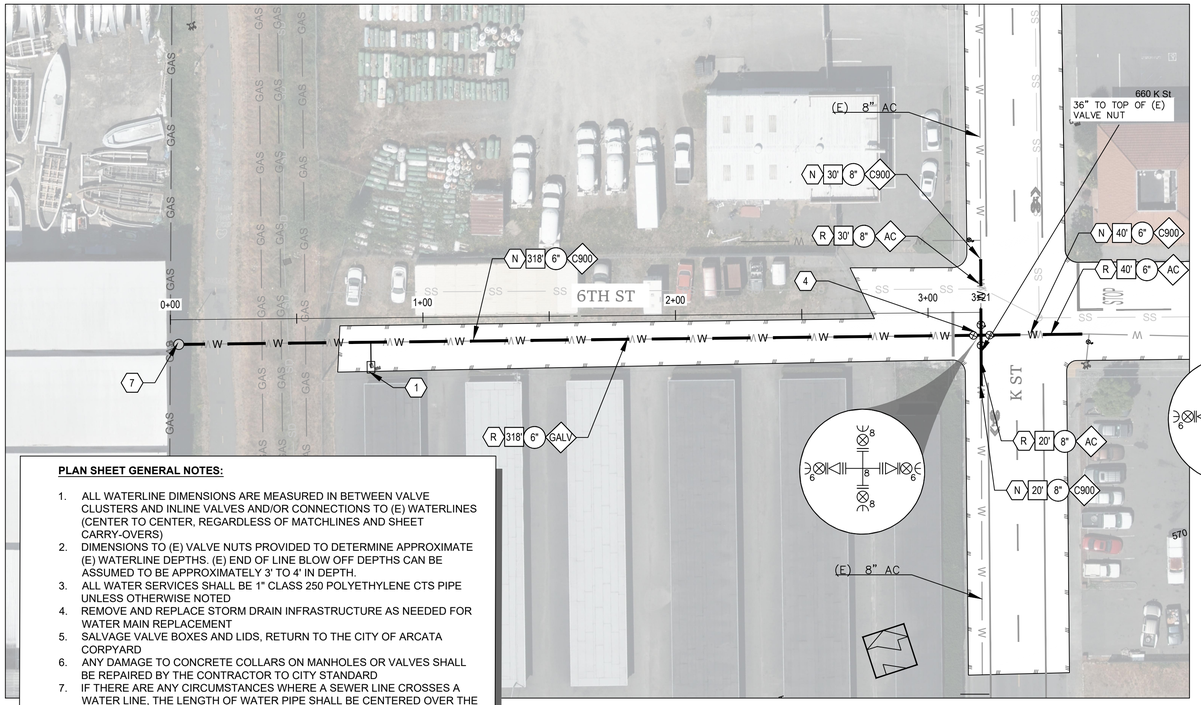

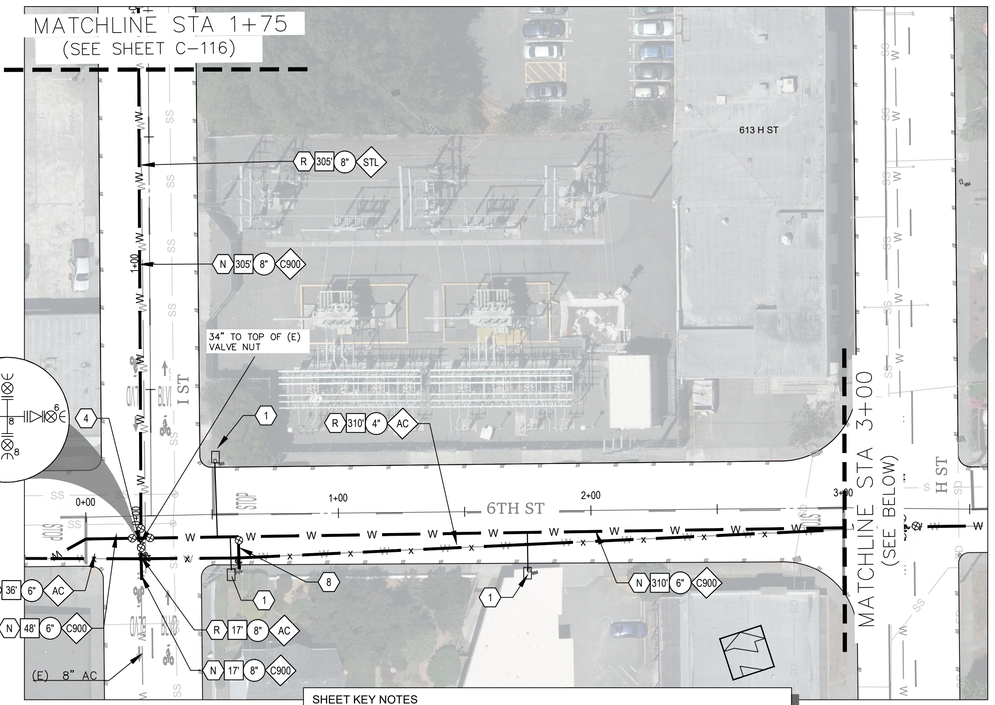

PLAN SHEET GENERAL NOTES:

1. ALL WATERLINE DIMENSIONS ARE MEASURED IN BETWEEN VALVE CLUSTERS AND INLINE VALVES AND/OR CONNECTIONS TO (E) WATERLINES (CENTER TO CENTER, REGARDLESS OF MATCHLINES AND SHEET CARRY-OVERS)
2. DIMENSIONS TO (E) VALVE NUTS PROVIDED TO DETERMINE APPROXIMATE (E) WATERLINE DEPTHS. (E) END OF LINE BLOW OFF DEPTHS CAN BE ASSUMED TO BE APPROXIMATELY 3' TO 4' IN DEPTH.
3. ALL WATER SERVICES SHALL BE 1" CLASS 250 POLYETHYLENE CTS PIPE UNLESS OTHERWISE NOTED
4. REMOVE AND REPLACE STORM DRAIN INFRASTRUCTURE AS NEEDED FOR WATER MAIN REPLACEMENT
5. SALVAGE VALVE BOXES AND LIDS, RETURN TO THE CITY OF ARCATA CORPYARD
6. ANY DAMAGE TO CONCRETE COLLARS ON MANHOLES OR VALVES SHALL BE REPAIRED BY THE CONTRACTOR TO CITY STANDARD
7. IF THERE ARE ANY CIRCUMSTANCES WHERE A SEWER LINE CROSSES A WATER LINE, THE LENGTH OF WATER PIPE SHALL BE CENTERED OVER THE SEWER LINE TO REDUCE THE RISK OF CROSS CONTAMINATION. SEE DETAIL
8. ALL CONCRETE RELATED DEMOLITION AND REPLACEMENT TO FACILITATE WATER PIPE AND WATER METER INSTALLATION SHALL BE INCIDENTAL TO THAT ITEM OF WORK (UNLESS OTHERWISE NOTED). A MINIMUM OF ONE 5'X5' PCC PANEL WILL BE REPLACED FOR EVERY WATER METER, UNLESS OTHERWISE NOTED.
9. TRENCHING & STREET PAVEMENT RESTORATION WORK SHALL BE IN ACCORDANCE WITH THE CITY STD DTL G-02 AND ST-30.
10. DEMOLISH EXISTING WATERLINES AND REPLACE WITH C900 PIPE A MINIMUM OF 10 FEET IN EACH DIRECTION FROM PROPOSED VALVE CLUSTERS, UNLESS OTHERWISE NOTED.
11. DEMOLITION OF EXISTING VALVE ASSEMBLIES SHALL BE INCIDENTAL TO THE VALVE INSTALLATION ITEM OF WORK.
12. CONNECT ALL NEW PIPING TO EXISTING PER CITY STANDARD DETAIL W-50.

SHEET KEY NOTES

1	(N) 1" SERVICE LINE & WATER METER PER CITY STD DTL W-05
2	(N) 2" SERVICE LINE & WATER METER PER CITY STD DTL W-17
3	(N) 3 FLANGE TEE PER CITY STD DTL W-50
4	(N) 4 FLANGE CROSS PER CITY STD DTL W-50
5	(N) GATE VALVE AND BOX PER CITY STD DTL W-02
6	(N) FIRE HYDRANT, 6" FIRE LINE, & 6" GATE VALVE PER CITY STD DTL W-40
7	(N) BLOWOFF VALVE PER CITY STD DTL W-13
8	(N) 6" FIRE LINE & 6" GATE VALVE PER CITY STD DTL W-09
A	ABANDON (E) WATERLINE IN PLACE PER CITY STD DTL SS-14
R	REMOVE (E) WATERLINE, (TYP)
N	INSTALL (N) WATERLINE, (TYP)

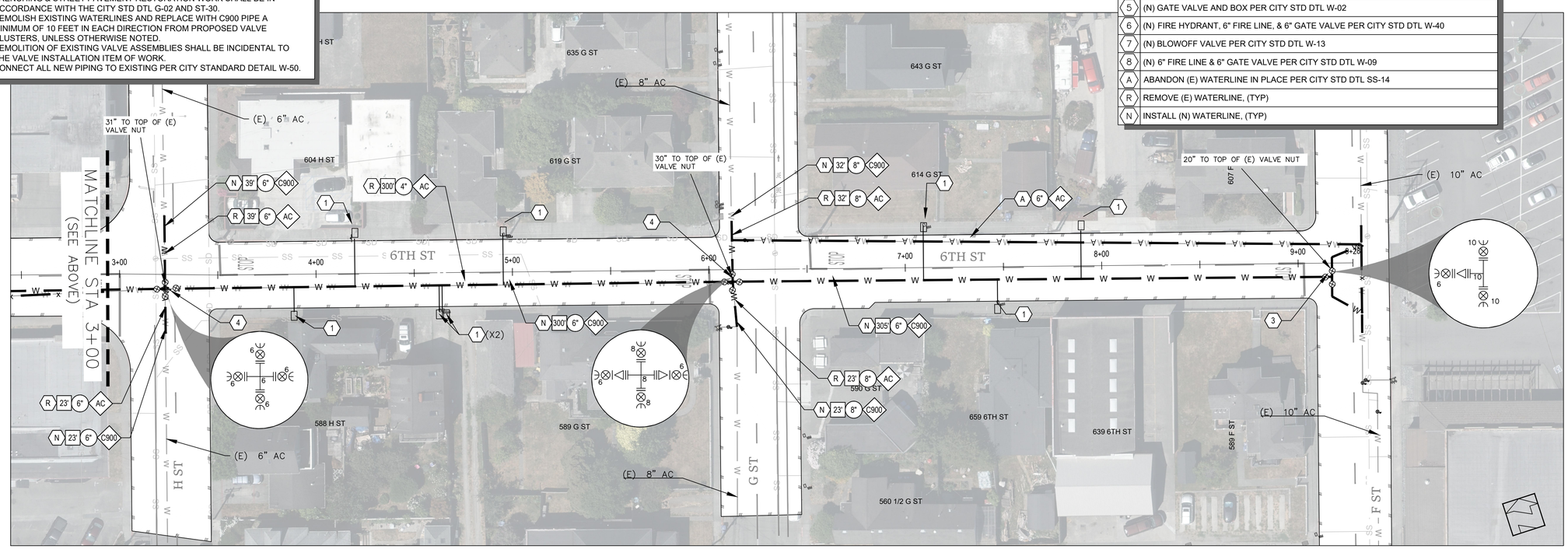

6TH ST (WEST OF K ST) – PLAN VIEW
STATION 0+00 TO 3+21

6TH ST (EAST OF I ST) – PLAN VIEW
STATION 0+00 TO 9+28

Sheet Title: 6TH ST

Project Name: STEEL WATERLINE REPLACEMENT PROJECT

Project Address: VARIOUS LOCATIONS

Designed By	JONATHAN A. KIRCHUBEL
Drawn By	JONATHAN A. KIRCHUBEL
Checked By	DAVID CAISSE
Approved By	NETRA B. KHATRI
Date	JANUARY 2025
Sheet	C-117
Scale	1"=30'
Page	22

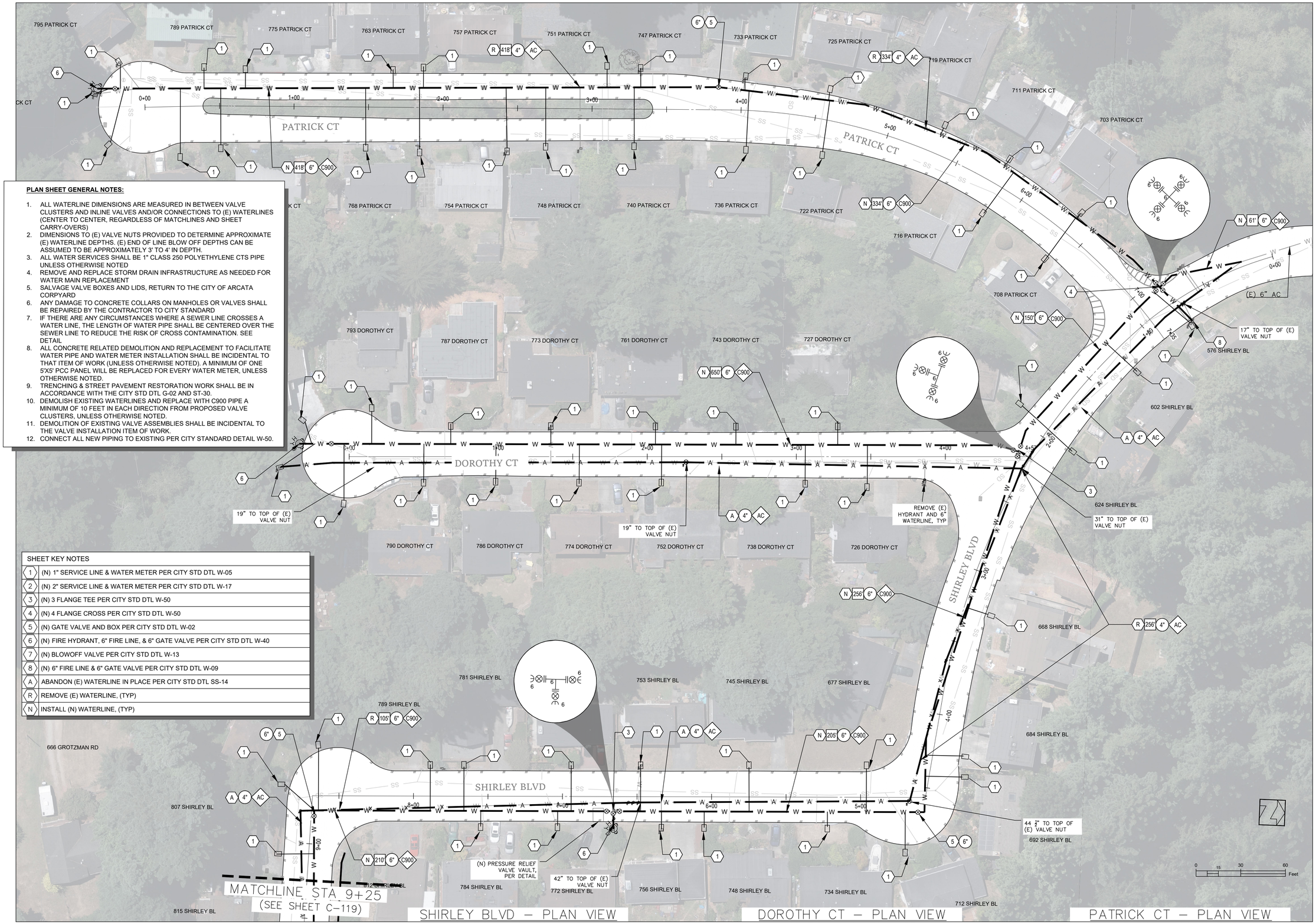

PLAN SHEET GENERAL NOTES:

1. ALL WATERLINE DIMENSIONS ARE MEASURED IN BETWEEN VALVE CLUSTERS AND INLINE VALVES AND/OR CONNECTIONS TO (E) WATERLINES (CENTER TO CENTER, REGARDLESS OF MATCHLINES AND SHEET CARRY-OVERS)
2. DIMENSIONS TO (E) VALVE NUTS PROVIDED TO DETERMINE APPROXIMATE (E) WATERLINE DEPTHS. (E) END OF LINE BLOW OFF DEPTHS CAN BE ASSUMED TO BE APPROXIMATELY 3' TO 4' IN DEPTH.
3. ALL WATER SERVICES SHALL BE 1" CLASS 250 POLYETHYLENE CTS PIPE UNLESS OTHERWISE NOTED
4. REMOVE AND REPLACE STORM DRAIN INFRASTRUCTURE AS NEEDED FOR WATER MAIN REPLACEMENT
5. SALVAGE VALVE BOXES AND LIDS, RETURN TO THE CITY OF ARCATA CORPYARD
6. ANY DAMAGE TO CONCRETE COLLARS ON MANHOLES OR VALVES SHALL BE REPAIRED BY THE CONTRACTOR TO CITY STANDARD
7. IF THERE ARE ANY CIRCUMSTANCES WHERE A SEWER LINE CROSSES A WATER LINE, THE LENGTH OF WATER PIPE SHALL BE CENTERED OVER THE SEWER LINE TO REDUCE THE RISK OF CROSS CONTAMINATION. SEE DETAIL
8. ALL CONCRETE RELATED DEMOLITION AND REPLACEMENT TO FACILITATE WATER PIPE AND WATER METER INSTALLATION SHALL BE INCIDENTAL TO THAT ITEM OF WORK (UNLESS OTHERWISE NOTED). A MINIMUM OF ONE 5'X5' PCC PANEL WILL BE REPLACED FOR EVERY WATER METER, UNLESS OTHERWISE NOTED.
9. TRENCHING & STREET PAVEMENT RESTORATION WORK SHALL BE IN ACCORDANCE WITH THE CITY STD DTL G-02 AND ST-30.
10. DEMOLISH EXISTING WATERLINES AND REPLACE WITH C900 PIPE A MINIMUM OF 10 FEET IN EACH DIRECTION FROM PROPOSED VALVE CLUSTERS, UNLESS OTHERWISE NOTED.
11. DEMOLITION OF EXISTING VALVE ASSEMBLIES SHALL BE INCIDENTAL TO THE VALVE INSTALLATION ITEM OF WORK.
12. CONNECT ALL NEW PIPING TO EXISTING PER CITY STANDARD DETAIL W-50.

SHEET KEY NOTES	
1	(N) 1" SERVICE LINE & WATER METER PER CITY STD DTL W-05
2	(N) 2" SERVICE LINE & WATER METER PER CITY STD DTL W-17
3	(N) 3 FLANGE TEE PER CITY STD DTL W-50
4	(N) 4 FLANGE CROSS PER CITY STD DTL W-50
5	(N) GATE VALVE AND BOX PER CITY STD DTL W-02
6	(N) FIRE HYDRANT, 6" FIRE LINE, & 6" GATE VALVE PER CITY STD DTL W-40
7	(N) BLOWOFF VALVE PER CITY STD DTL W-13
8	(N) 6" FIRE LINE & 6" GATE VALVE PER CITY STD DTL W-09
A	ABANDON (E) WATERLINE IN PLACE PER CITY STD DTL SS-14
R	REMOVE (E) WATERLINE, (TYP)
N	INSTALL (N) WATERLINE, (TYP)

SHIRLEY BLVD – PLAN VIEW
STATION 0+00 TO 9+25

DOROTHY CT – PLAN VIEW
STATION 0+00 TO 4+57

PATRICK CT – PLAN VIEW
STATION 0+00 TO 7+35

REGISTERED PROFESSIONAL ENGINEER DAVID F. CAISSE No. C80962 CIVIL STATE OF CALIFORNIA

REGISTERED PROFESSIONAL ENGINEER NETRA KHATRI 75428 CIVIL STATE OF CALIFORNIA

City of ARCATA

Sheet Title: PATRICK CT, DOROTHY COURT, & SHIRLEY BLVD

Project Name: STEEL WATERLINE REPLACEMENT PROJECT

Project Address: VARIOUS LOCATIONS

Designed By: JONATHAN A. KIRCHUBEL

Drawn By: JONATHAN A. KIRCHUBEL

Checked By: DAVID CAISSE

Approved By: NETRA B. KHATRI

Date	Sheet
JANUARY 2025	C-118
Scale	**Page**
1"=30'	23

SHEET KEY NOTES	
1	(N) 1" SERVICE LINE & WATER METER PER CITY STD DTL W-05
2	(N) 2" SERVICE LINE & WATER METER PER CITY STD DTL W-17
3	(N) 3 FLANGE TEE PER CITY STD DTL W-50
4	(N) 4 FLANGE CROSS PER CITY STD DTL W-50
5	(N) GATE VALVE AND BOX PER CITY STD DTL W-02
6	(N) FIRE HYDRANT, 6" FIRE LINE, & 6" GATE VALVE PER CITY STD DTL W-40
7	(N) BLOWOFF VALVE PER CITY STD DTL W-13
8	(N) 6" FIRE LINE & 6" GATE VALVE PER CITY STD DTL W-09
A	ABANDON (E) WATERLINE IN PLACE PER CITY STD DTL SS-14
R	REMOVE (E) WATERLINE, (TYP)
N	INSTALL (N) WATERLINE, (TYP)

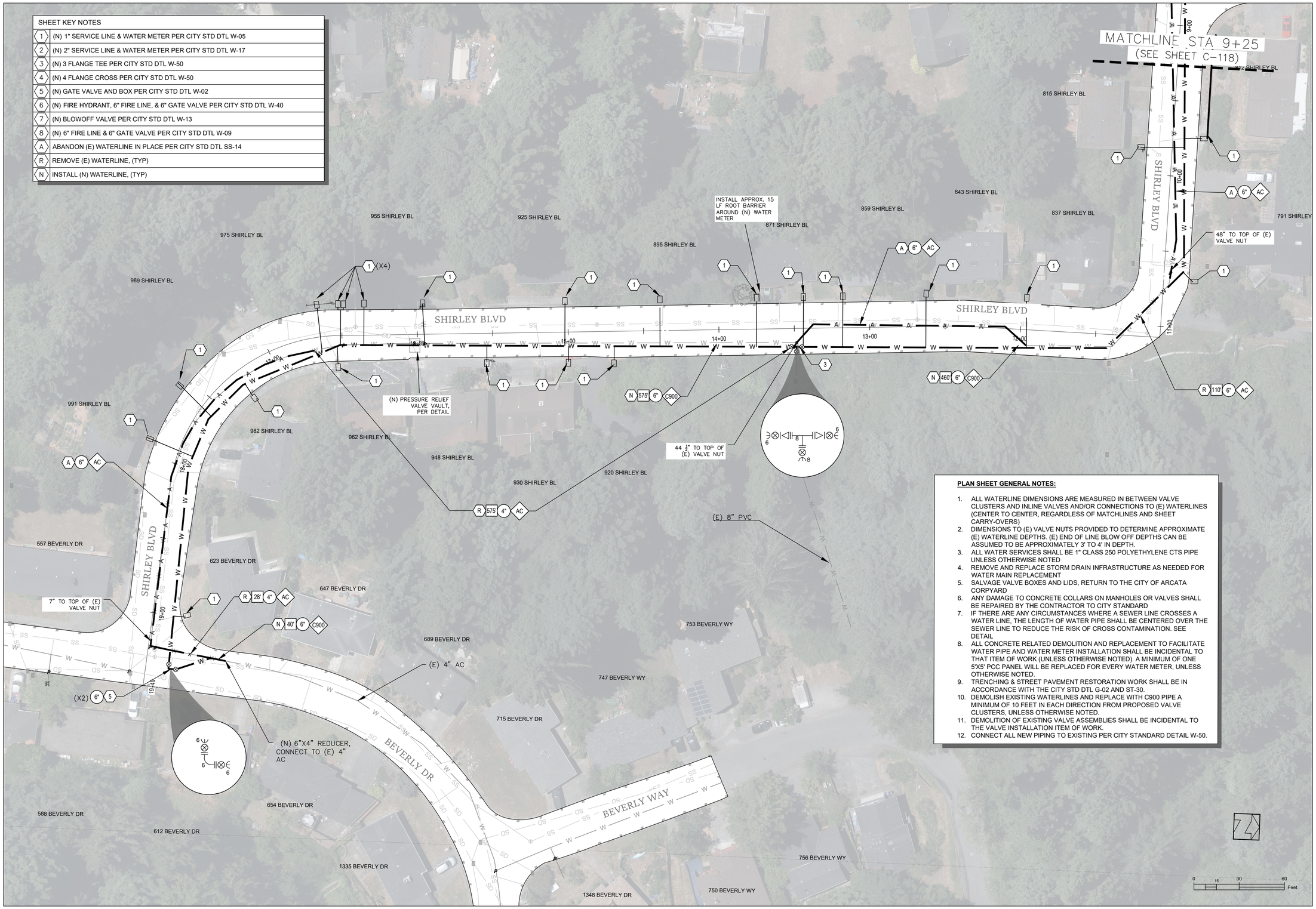

PLAN SHEET GENERAL NOTES:

1. ALL WATERLINE DIMENSIONS ARE MEASURED IN BETWEEN VALVE CLUSTERS AND INLINE VALVES AND/OR CONNECTIONS TO (E) WATERLINES (CENTER TO CENTER, REGARDLESS OF MATCHLINES AND SHEET CARRY-OVERS)
2. DIMENSIONS TO (E) VALVE NUTS PROVIDED TO DETERMINE APPROXIMATE (E) WATERLINE DEPTHS. (E) END OF LINE BLOW OFF DEPTHS CAN BE ASSUMED TO BE APPROXIMATELY 3' TO 4' IN DEPTH.
3. ALL WATER SERVICES SHALL BE 1" CLASS 250 POLYETHYLENE CTS PIPE UNLESS OTHERWISE NOTED
4. REMOVE AND REPLACE STORM DRAIN INFRASTRUCTURE AS NEEDED FOR WATER MAIN REPLACEMENT
5. SALVAGE VALVE BOXES AND LIDS, RETURN TO THE CITY OF ARCATA CORPYARD
6. ANY DAMAGE TO CONCRETE COLLARS ON MANHOLES OR VALVES SHALL BE REPAIRED BY THE CONTRACTOR TO CITY STANDARD
7. IF THERE ARE ANY CIRCUMSTANCES WHERE A SEWER LINE CROSSES A WATER LINE, THE LENGTH OF WATER PIPE SHALL BE CENTERED OVER THE SEWER LINE TO REDUCE THE RISK OF CROSS CONTAMINATION. SEE DETAIL
8. ALL CONCRETE RELATED DEMOLITION AND REPLACEMENT TO FACILITATE WATER PIPE AND WATER METER INSTALLATION SHALL BE INCIDENTAL TO THAT ITEM OF WORK (UNLESS OTHERWISE NOTED). A MINIMUM OF ONE 5'X5' PCC PANEL WILL BE REPLACED FOR EVERY WATER METER, UNLESS OTHERWISE NOTED.
9. TRENCHING & STREET PAVEMENT RESTORATION WORK SHALL BE IN ACCORDANCE WITH THE CITY STD DTL G-02 AND ST-30.
10. DEMOLISH EXISTING WATERLINES AND REPLACE WITH C900 PIPE A MINIMUM OF 10 FEET IN EACH DIRECTION FROM PROPOSED VALVE CLUSTERS, UNLESS OTHERWISE NOTED.
11. DEMOLITION OF EXISTING VALVE ASSEMBLIES SHALL BE INCIDENTAL TO THE VALVE INSTALLATION ITEM OF WORK.
12. CONNECT ALL NEW PIPING TO EXISTING PER CITY STANDARD DETAIL W-50.

SHIRLEY BLVD – PLAN VIEW

STATION 9+25 TO 19+49

REGISTERED PROFESSIONAL ENGINEER JOHN F. CAISSE No. C82962 CIVIL STATE OF CALIFORNIA

REGISTERED PROFESSIONAL ENGINEER NETRA KHATRI 75428 CIVIL STATE OF CALIFORNIA

City of ARCATA

Sheet Title: SHIRLEY BLVD & BEVERLY DR

Project Name: STEEL WATERLINE REPLACEMENT PROJECT

Project Address: VARIOUS LOCATIONS

Designed By: JONATHAN A. KIRCHUBEL

Drawn By: JONATHAN A. KIRCHUBEL

Checked By: DAVID CAISSE

Approved By: NETRA B. KHATRI

Date: JANUARY 2025

Sheet: C-119

Scale: 1"=30'

Page: 24

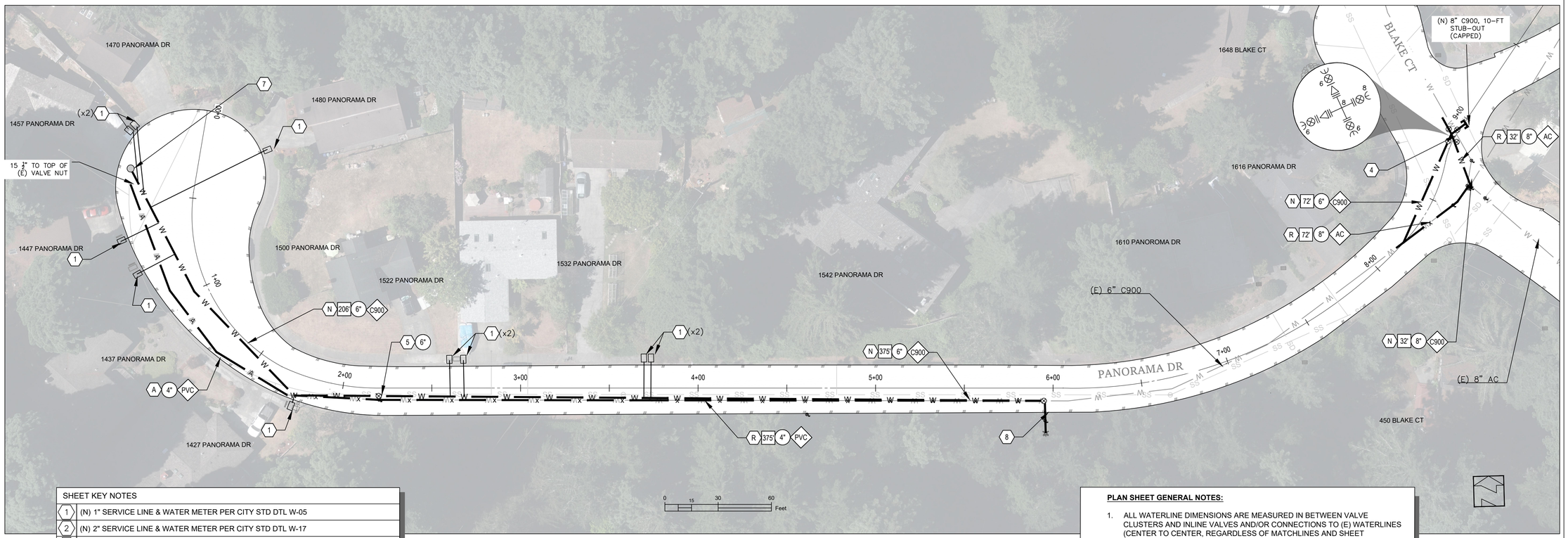

PANORAMA DR – PLAN VIEW

STATION 0+00 TO 9+00

SHEET KEY NOTES	
1	(N) 1" SERVICE LINE & WATER METER PER CITY STD DTL W-05
2	(N) 2" SERVICE LINE & WATER METER PER CITY STD DTL W-17
3	(N) 3 FLANGE TEE PER CITY STD DTL W-50
4	(N) 4 FLANGE CROSS PER CITY STD DTL W-50
5	(N) GATE VALVE AND BOX PER CITY STD DTL W-02
6	(N) FIRE HYDRANT, 6" FIRE LINE, & 6" GATE VALVE PER CITY STD DTL W-40
7	(N) BLOWOFF VALVE PER CITY STD DTL W-13
8	(N) 6" FIRE LINE & 6" GATE VALVE PER CITY STD DTL W-09
A	ABANDON (E) WATERLINE IN PLACE PER CITY STD DTL SS-14
R	REMOVE (E) WATERLINE, (TYP)
N	INSTALL (N) WATERLINE, (TYP)

PLAN SHEET GENERAL NOTES:

1. ALL WATERLINE DIMENSIONS ARE MEASURED IN BETWEEN VALVE CLUSTERS AND INLINE VALVES AND/OR CONNECTIONS TO (E) WATERLINES (CENTER TO CENTER, REGARDLESS OF MATCHLINES AND SHEET CARRY-OVERS)
2. DIMENSIONS TO (E) VALVE NUTS PROVIDED TO DETERMINE APPROXIMATE (E) WATERLINE DEPTHS. (E) END OF LINE BLOW OFF DEPTHS CAN BE ASSUMED TO BE APPROXIMATELY 3' TO 4' IN DEPTH.
3. ALL WATER SERVICES SHALL BE 1" CLASS 250 POLYETHYLENE CTS PIPE UNLESS OTHERWISE NOTED
4. REMOVE AND REPLACE STORM DRAIN INFRASTRUCTURE AS NEEDED FOR WATER MAIN REPLACEMENT
5. SALVAGE VALVE BOXES AND LIDS, RETURN TO THE CITY OF ARCATA CORPYARD
6. ANY DAMAGE TO CONCRETE COLLARS ON MANHOLES OR VALVES SHALL BE REPAIRED BY THE CONTRACTOR TO CITY STANDARD
7. IF THERE ARE ANY CIRCUMSTANCES WHERE A SEWER LINE CROSSES A WATER LINE, THE LENGTH OF WATER PIPE SHALL BE CENTERED OVER THE SEWER LINE TO REDUCE THE RISK OF CROSS CONTAMINATION. SEE DETAIL
8. ALL CONCRETE RELATED DEMOLITION AND REPLACEMENT TO FACILITATE WATER PIPE AND WATER METER INSTALLATION SHALL BE INCIDENTAL TO THAT ITEM OF WORK (UNLESS OTHERWISE NOTED). A MINIMUM OF ONE 5'X5' PCC PANEL WILL BE REPLACED FOR EVERY WATER METER, UNLESS OTHERWISE NOTED.
9. TRENCHING & STREET PAVEMENT RESTORATION WORK SHALL BE IN ACCORDANCE WITH THE CITY STD DTL G-02 AND ST-30.
10. DEMOLISH EXISTING WATERLINES AND REPLACE WITH C900 PIPE A MINIMUM OF 10 FEET IN EACH DIRECTION FROM PROPOSED VALVE CLUSTERS, UNLESS OTHERWISE NOTED.
11. DEMOLITION OF EXISTING VALVE ASSEMBLIES SHALL BE INCIDENTAL TO THE VALVE INSTALLATION ITEM OF WORK.
12. CONNECT ALL NEW PIPING TO EXISTING PER CITY STANDARD DETAIL W-50.

REGISTERED PROFESSIONAL ENGINEER JON F. CAISSE No. C82962 CIVIL STATE OF CALIFORNIA

REGISTERED PROFESSIONAL ENGINEER NETRA KHATRI 75428 CIVIL STATE OF CALIFORNIA

City of ARCATA

Sheet Title: PANORAMA DR

Project Name: STEEL WATERLINE REPLACEMENT PROJECT

Project Address: VARIOUS LOCATIONS

Designed By: JONATHAN A. KIRCHUBEL

Drawn By: JONATHAN A. KIRCHUBEL

Checked By: DAVID CAISSE

Approved By: NETRA B. KHATRI

Date	Sheet
JANUARY 2025	C-120
Scale	Page
1"=30'	25

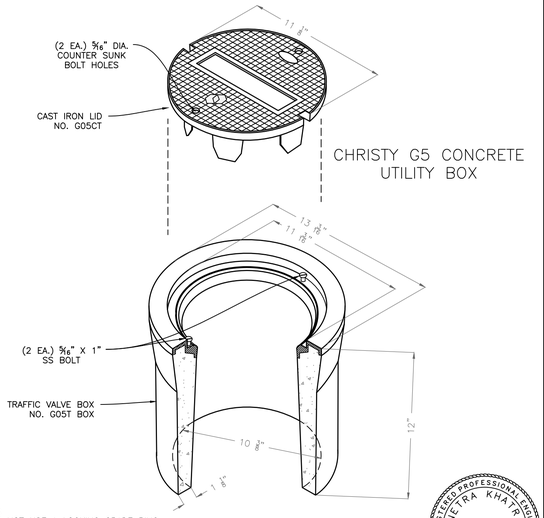

NOTES
1. DO NOT USE A LOCKING GRADE RING.
2. USE OF AN EQUIVALENT ALTERNATIVE REQUIRES PRE-APPROVAL.
3. LID SHALL BE STAMPED "SEWER" OR "WATER" OR "MONUMENT" AS APPROPRIATE.
4. CHRISTY G8 OR APPROVED EQUAL TO BE USED IN THE EVENT THAT A LARGER BOX IS NEEDED.

REGISTERED PROFESSIONAL ENGINEER NETRA KHATRI 75428 CIVIL STATE OF CALIFORNIA

REVISION	BY	APPROVED	DATE
UPDATE	KLR	DFC	04/2023

CITY OF ARCATA

VALVE BOX

APPROVED BY:

N. B. KHATRI, R.C.E. #75428

DRAWING NUMBER G-01

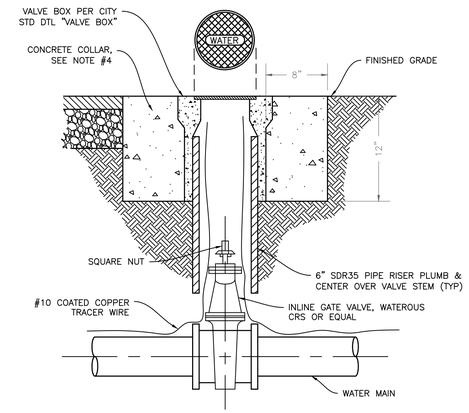

NOTES:
1. VALVES 2" THROUGH 10" SHALL BE RESILIENT WEDGE GATE VALVES WHEREAS ANY VALVES LARGER THAN 10" SHALL BE BUTTERFLY VALVES, UNLESS OTHERWISE APPROVED BY THE CITY ENGINEER.
2. VALVE BOX AS PER CITY STD DTL "VALVE BOX", G5 WITH LID STAMPED "WATER".
3. THRUST BLOCK REQUIRED ON ALL VALVE ASSEMBLIES PER CITY STD DTL "THRUST BLOCK INSTALL".
4. ALL CONCRETE SHALL BE 520-C-2500 AS PER THE "GREENBOOK" STANDARD SPECIFICATIONS FOR PUBLIC WORKS CONSTRUCTION.
5. INSPECTION OF FINISHED WORK REQUIRED. SCHEDULE INSPECTION A MINIMUM OF 24 HOURS IN ADVANCE.

REGISTERED PROFESSIONAL ENGINEER NETRA KHATRI 75428 CIVIL STATE OF CALIFORNIA

REVISION	BY	APPROVED	DATE
UPDATE	KLR	DFC	03/2023

CITY OF ARCATA

GATE VALVE AND BOX INSTALLATION

APPROVED BY:

N. B. KHATRI, R.C.E. #75428

DRAWING NUMBER W-02

PICTURED

- UTILITY BOX No. B12 BOX (12" X 20")
- REINFORCED CONCRETE WITH CAST IRON READING LID No. B12G
- STEEL CHECKER PLATE COVER WITH 6" READING LID No. B12-61G

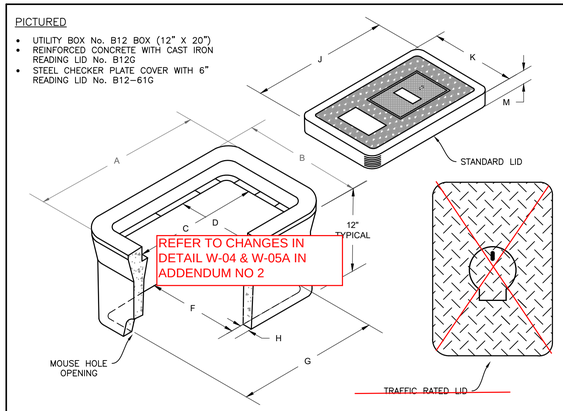

WATER SERVICE TYPE	A	B	C	D	F	G	H	J	K	M	CODE
ONE 3/4" OR 5/8" OR 1" WATER METER	22 3/4	15 1/4	16 1/2	9 7/8	12	20	1 1/2	18 5/8	11 7/8	1 1/2	B12 BOX, B12G LID
ONE 3/4" OR 5/8" OR 1" WATER METER	25 5/8	15 5/8	19 1/2	9 1/2	11 1/2	22 1/2	1 1/2	20 1/2	10 5/8	2	B16 BOX, B16G LID
TWO 3/4" OR 5/8" OR 1" WATER METERS	24	23 1/2	18 5/8	16 1/2	19 3/4	20 3/4	1 1/2	19 1/2	18	2	B24 BOX, B24G LID
ONE 2" OR 4" WATER METER	27 1/2	18	22	12 1/2	13 1/4	24 1/4	1 1/2	23 1/2	13 3/4	2	N30 BOX, B30G LID

NOTES:
1. TRAFFIC RATED LID & OTHER LID VARIATIONS REQUIRE PRE-APPROVAL.
2. TRAFFIC RATED BOXES AND LIDS TO BE INSTALLED IN DRIVEWAYS AND LOCATIONS WHERE VEHICULAR TRAFFIC MAY OCCUR.
3. MOUSE HOLE SIZE AND LOCATION MAY VARY WITH BOX SIZE AND CODE No.
4. TABLE MEASUREMENTS SHOWN ABOVE ARE IN INCHES.

REGISTERED PROFESSIONAL ENGINEER NETRA KHATRI 75428 CIVIL STATE OF CALIFORNIA

REVISION	BY	APPROVED	DATE
UPDATE	KLR	DFC	03/2023

CITY OF ARCATA

CHRISTY WATER METER BOXES

APPROVED BY:

N. B. KHATRI, R.C.E. #75428

DRAWING NUMBER W-04

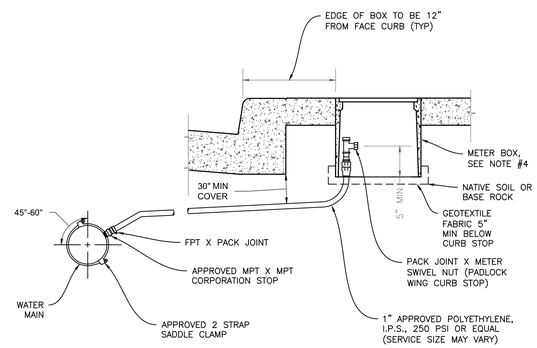

NOTES:
1. ALL MAINS SHALL HAVE 2 STRAP SADDLES FOR SERVICE CONNECTIONS.
2. SADDLES SHALL BE 2" MINIMUM WIDTH.
3. SIZES INDICATED ARE MINIMUM.
4. METER BOX AND LID PER CITY STD DTL "METER BOXES".
5. TRAFFIC LOADING BOX AND LID TO BE INSTALLED IN ALL DRIVEWAYS OR LOCATIONS WHERE VEHICULAR TRAFFIC MAY OCCUR, OR WHERE SPECIFIED ON PLANS.
6. METER BOXES TO BE SET FLUSH WITH SIDEWALK, CURB, OR FINISHED GRADE.
7. PRIOR TO METER SET, ADDRESS TO BE CLEARLY MARKED ON TOPSIDE LIP OF METER BOX W/PERMANENT FELT MARKER.
8. AN APPROVED REDUCING ADAPTER SHALL BE USED FOR 3/4" METER INSTALLATION ON A 1" WATER SERVICE LATERAL.
9. ANY OVERSIZED SADDLES REQUIRE A BRASS REDUCING BUSHING BEFORE CORP STOP.
10. INSPECTION OF FINISHED WORK REQUIRED. SCHEDULE INSPECTION A MINIMUM OF 48 HOURS IN ADVANCE.

REGISTERED PROFESSIONAL ENGINEER NETRA KHATRI 75428 CIVIL STATE OF CALIFORNIA

REVISION	BY	APPROVED	DATE
UPDATE	KLR	DFC	03/2023

CITY OF ARCATA

SINGLE SERVICE (STANDARD)

APPROVED BY:

N. B. KHATRI, R.C.E. #75428

DRAWING NUMBER W-05

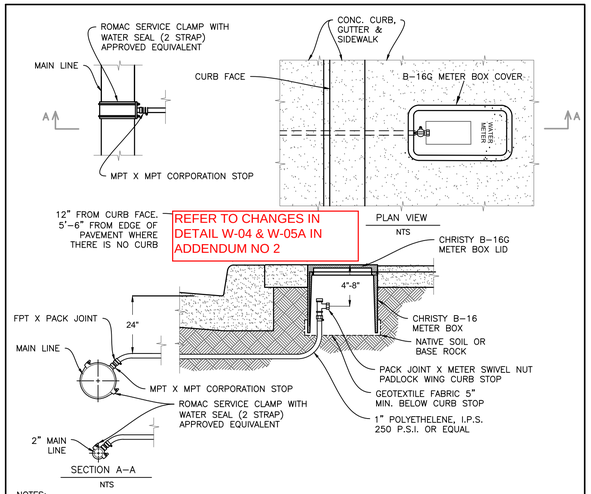

NOTES:
1. ALL MAINS SHALL HAVE 2 STRAP LIP SADDLES FOR SERVICE CONNECTIONS AND BE CLEARLY MARKED ON TOPSIDE OF METER BOX W/ PERMANENT FELT MARKER.
2. SADDLES SHALL BE 2" MINIMUM WIDTH.
3. SIZES INDICATED ARE MINIMUM.
4. FOR SINGLE SERVICE USE CHRISTY WATER SERVICE LATERAL, USE A BRASS B-16 BOX AND COVER OR APPROVED EQUIV. REDUCING ADAPTER AFTER THE CURB STOP.
5. TRAFFIC LOADING BOX AND LID TO BE INSTALLED IN ALL DRIVEWAYS OR LOCATIONS WHERE VEHICULAR TRAFFIC MAY OCCUR, OR WHERE SPECIFIED ON PLANS.
6. IF OVERSIZED SADDLE, USE A BRASS OR REDUCING BUSHING BEFORE CORP STOP.
7. CONTACT CITY STAFF PRIOR TO MAKING ANY NEW CONNECTIONS.
8. METER BOXES TO BE SET FLUSH WITH TOP OF CURB OR SIDEWALK, IF APPLICABLE.

REGISTERED PROFESSIONAL ENGINEER NETRA KHATRI 75428 CIVIL STATE OF CALIFORNIA

REVISION	BY	APPROVED	DATE
UPDATE	KLR	DFC	03/2023

CITY OF ARCATA

1-INCH SINGLE WATER METER SERVICE

APPROVED BY:

N. B. KHATRI, R.C.E. #75428

DRAWING NUMBER W-05A

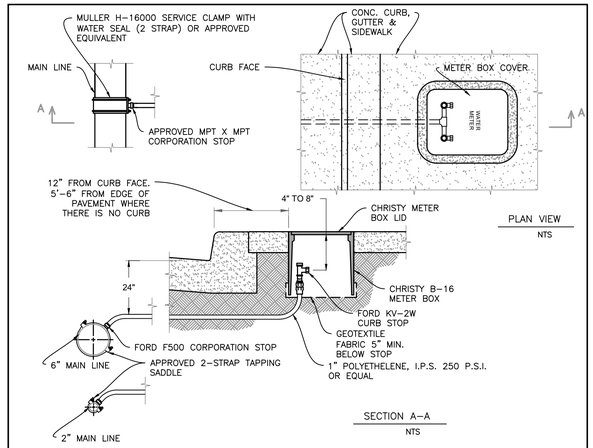

NOTES:
1. ALL PVC MAINS SHALL HAVE SADDLES FOR SERVICE CONNECTIONS.
2. SADDLES SHALL BE 2" MINIMUM WIDTH.
3. SIZES INDICATED ARE MINIMUM.
4. FOR DOUBLE SERVICE USE CHRISTY B-12 BOX AND COVER OR APPROVED EQUIV.
5. TRAFFIC LOADING BOX AND LID TO BE INSTALLED IN ALL DRIVEWAYS OR LOCATIONS WHERE VEHICULAR TRAFFIC MAY OCCUR, OR WHERE SPECIFIED ON PLANS.
6. METER BOXES TO BE SET FLUSH WITH TOP OF CURB OR SIDEWALK, IF APPLICABLE.
7. PRIOR TO METER SET, ADDRESS TO BE CLEARLY MARKED ON TOPSIDE LIP OF METER BOX W/ PERMANENT FELT MARKER.
8. FOR 3/4" METER INSTALLATION ON A 1" WATER SERVICE LATERAL, USE A REDUCING ADAPTER

REGISTERED PROFESSIONAL ENGINEER NETRA KHATRI 75428 CIVIL STATE OF CALIFORNIA

REVISION	BY	APPROVED	DATE
UPDATE	KLR	DFC	03/2023

CITY OF ARCATA

DOUBLE METER SERVICE FOR UP TO 1 INCH LINE

APPROVED BY:

N. B. KHATRI, R.C.E. #75428

DRAWING NUMBER W-06

REGISTERED PROFESSIONAL ENGINEER JONATHAN A. KIRCHUBEL No. C80962 CIVIL STATE OF CALIFORNIA

REGISTERED PROFESSIONAL ENGINEER NETRA KHATRI 75428 CIVIL STATE OF CALIFORNIA

City of ARCATA

Sheet Title: STANDARD DETAILS

Project Name: STEEL WATERLINE REPLACEMENT PROJECT

Project Address: VARIOUS LOCATIONS

Designed By: JONATHAN A. KIRCHUBEL

Drawn By: JONATHAN A. KIRCHUBEL

Checked By: DAVID CAISSE

Approved By: NETRA B. KHATRI

Date: JANUARY 2025

Sheet: C-501

Scale: N/A

Page: 26

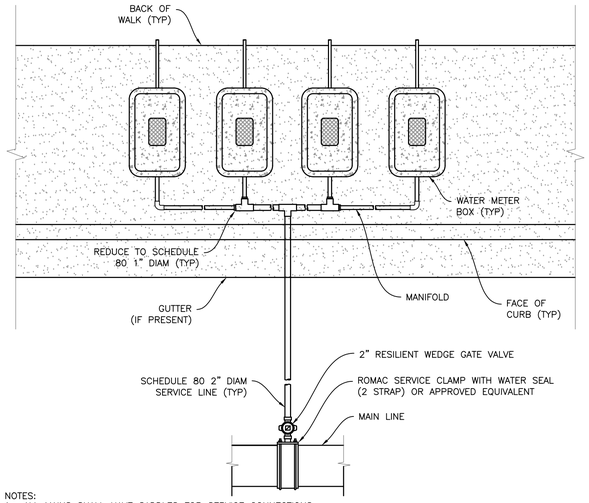

NOTES:
1. ALL MAINS SHALL HAVE SADDLES FOR SERVICE CONNECTIONS.
2. SADDLES SHALL BE 2" MINIMUM WIDTH.
3. SEE CITY STD DTL "GATE VALVE AND BOX INSTALLATION" FOR GATE VALVE INSTALLATION.
4. SEE CITY STD DTL "CHRISTY WATER METER BOXES" FOR METER BOX SELECTION AND SIZING.
5. SEE CITY STD DTL "SINGLE SERVICE" FOR METER BOX AND CURB STOP INSTALLATION.
6. METER BOXES TO BE SET FLUSH WITH SIDEWALK, CURB, OR FINISHED GRADE.
7. PRIOR TO METER SET, ADDRESS TO BE CLEARLY MARKED ON TOPSIDE LIP OF METER BOX W/PERMANENT FELT MARKER.
8. A REDUCING ADAPTER SHALL BE USED FOR ¾" AND ⅝" METER INSTALLATION ON A 1" SERVICE LATERAL.
9. OVERSIZED SADDLES REQUIRE A BRASS REDUCING BUSHING BEFORE CURB STOP.

REGISTERED PROFESSIONAL ENGINEER NETRA KHATRI 75428 CIVIL STATE OF CALIFORNIA

REVISION	BY	APPROVED	DATE
UPDATE	KLR	DFC	03/2023

CITY OF ARCATA

MULTIPLE SERVICES

APPROVED BY:

N. B. KHATRI, R.C.E. #75428

DRAWING NUMBER W-07

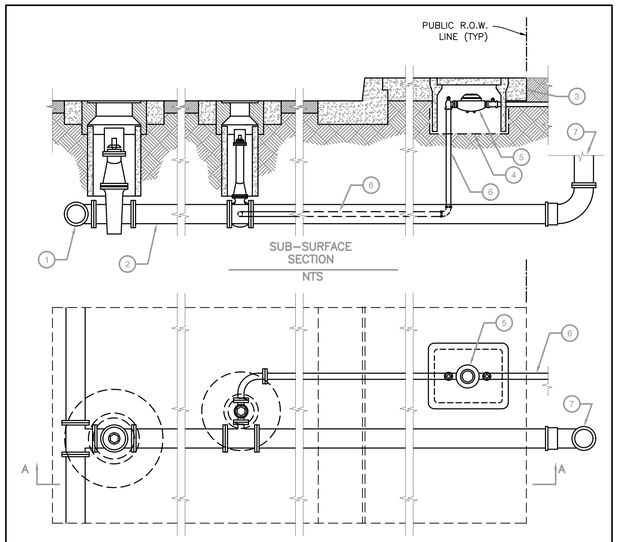

NOTES:
1. MAINLINE
2. SERVICE LINE
3. BACK OF SIDEWALK (TYP)
4. GEOTEXTILE FABRIC 5" MIN. BELOW CURB STOP
5. WATER METER
6. DOMESTIC WATER LINE
7. TO DETECTOR CHECK VALVE

REGISTERED PROFESSIONAL ENGINEER NETRA KHATRI 75428 CIVIL STATE OF CALIFORNIA

REVISION	BY	APPROVED	DATE
UPDATE	KLR	DFC	03/2023

CITY OF ARCATA

FIRE LINE INSTALLATION

APPROVED BY:

N. B. KHATRI, R.C.E. #75428

DRAWING NUMBER W-09

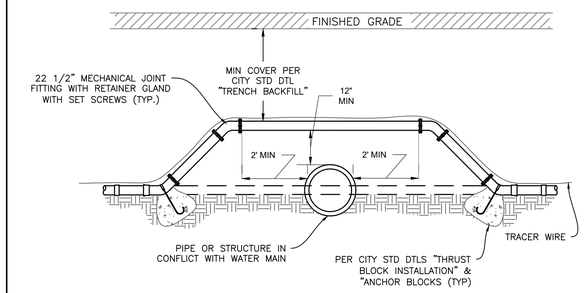

NOTES:
1. ALL PIPE FITTINGS SHALL BE CEMENT LINED CLASS 50 DUCTILE IRON PIPE ENCASED IN POLYETHYLENE FILM IN TUBE FORM PER CITY OF ARCATA STD SPECIFICATIONS.
2. ONLY MECHANICAL JOINT FITTINGS WITH RETAINER GLANDS MAY BE USED.
3. ALL BENDS SHALL BE 22-1/2" FITTINGS UNLESS APPROVED BY CITY ENGINEER.
4. TO BE USED ONLY WITH THE DIRECT APPROVAL OF THE CITY ENGINEER.
5. TRACER WIRE SHALL BE #10 COATED COPPER WIRE.
6. TRENCH AND BACKFILL PER CITY STD DTL "TRENCH BACKFILL".

REGISTERED PROFESSIONAL ENGINEER NETRA KHATRI 75428 CIVIL STATE OF CALIFORNIA

REVISION	BY	APPROVED	DATE
UPDATE	KLR	DFC	03/2023

CITY OF ARCATA

WATER MAIN INSTALLATION OVER STRUCTURE

APPROVED BY:

N. B. KHATRI, R.C.E. #75428

DRAWING NUMBER W-12

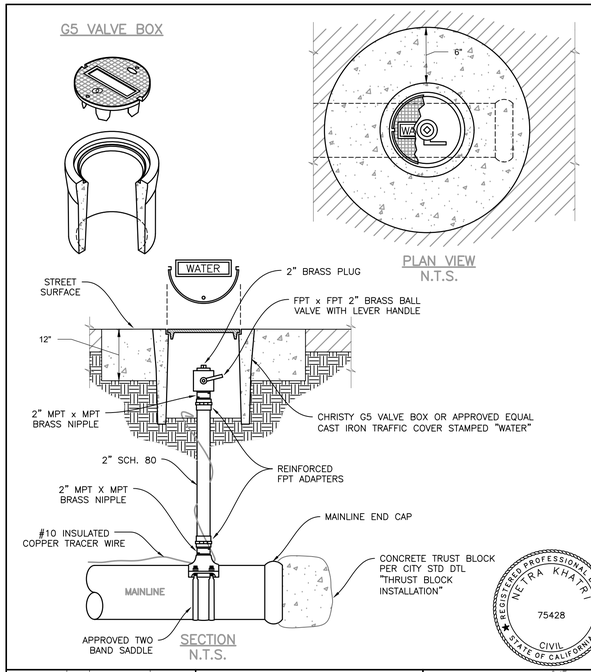

REGISTERED PROFESSIONAL ENGINEER NETRA KHATRI 75428 CIVIL STATE OF CALIFORNIA

REVISION	BY	APPROVED	DATE
UPDATE	KLR	DFC	03/2023

CITY OF ARCATA

ENDLINE BLOW-OFF

APPROVED BY:

N. B. KHATRI, R.C.E. #75428

DRAWING NUMBER W-13

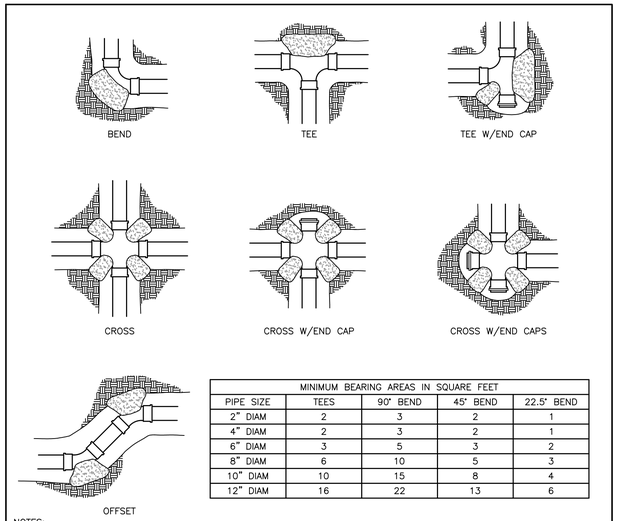

MINIMUM BEARING AREAS IN SQUARE FEET				
PIPE SIZE	TEES	90° BEND	45° BEND	22.5° BEND
2" DIAM	2	3	2	1
4" DIAM	2	3	2	1
6" DIAM	3	5	3	2
8" DIAM	6	10	5	3
10" DIAM	10	15	8	4
12" DIAM	16	22	13	6

NOTES:
1. THE LOCATION OF THRUST BLOCKS IS DEPENDENT ON DIRECTION OF THRUST AS SHOWN.
2. INSTALL THRUST BLOCKS AGAINST FIRM UNDISTURBED EARTH. CONCRETE SHALL ATTAIN A MIN OF 2000 PSI COMPRESSIVE STRENGTH IN 28 DAYS.
3. SHORT LENGTHS MUST BE INSTALLED NEXT TO FITTING: 3'-3" MAXIMUM LENGTHS FOR PIPES 6" OR LESS IN DIAMETER, AND 6'-6" MAXIMUM LENGTHS FOR PIPES LARGER THAN 6" IN DIAMETER.
4. TABLE SHOWS THRUST BLOCK BEARING AREAS FOR PVC PIPE IN SANDY SOIL (150 PSI WATER PRESSURE). FOR SOFT CLAY THE AREAS LISTED ABOVE SHALL BE DOUBLED.
5. CONCRETE SHALL BE PLACED SO THAT FITTINGS AND VALVES WILL BE ACCESSIBLE FOR REPAIR OR REPLACEMENT.

REGISTERED PROFESSIONAL ENGINEER NETRA KHATRI 75428 CIVIL STATE OF CALIFORNIA

REVISION	BY	APPROVED	DATE
UPDATE	KLR	DFC	03/2023

CITY OF ARCATA

THRUST BLOCK INSTALLATION

APPROVED BY:

N. B. KHATRI, R.C.E. #75428

DRAWING NUMBER W-15

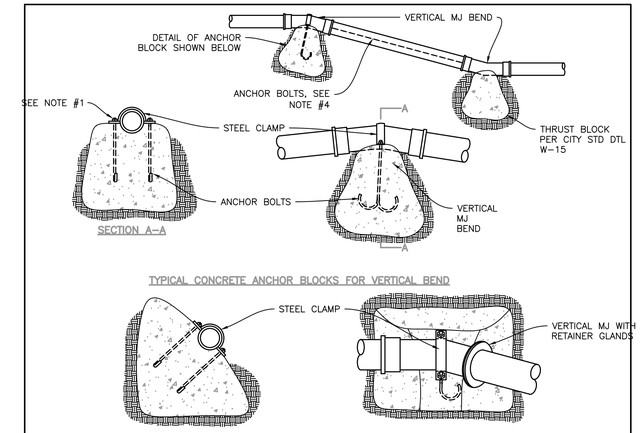

PIPE SIZE	TIE RODS	STEEL CLAMPS
6"	5/8"	3" x 1/4"
8"	3/4"	3-1/4" x 1/4"
12"	1-1/4"	3" x 1/2"

NOTES
1. ALL EXPOSED THREADS SHALL BE PAINTED OR SEALED WITH AN APPROVED SUBSTITUTE AFTER NUTS ARE TIGHTENED.
2. CONCRETE ANCHOR BLOCKS SHALL BE INSTALLED TO WITHSTAND A THRUST PRODUCED BY THE TEST PRESSURE PLUS 50 PSI MIN.
3. DIMENSIONS FOR TIE RODS AND CLAMPS ARE LISTED IN TABLE.
4. FOR PVC PIPE, TIE RODS (THREADED FULL LENGTH) BETWEEN FITTINGS (MIN 2 REQUIRED) MAY BE USED IN LIEU OF RETAINING GLANDS.
5. USE MECHANICAL JOINT RETAINER GLANDS AT ALL FITTINGS.
6. THRUST BLOCK CONSTRUCTION PER CITY STD DTL "THRUST BLOCK INSTALLATION".

REGISTERED PROFESSIONAL ENGINEER NETRA KHATRI 75428 CIVIL STATE OF CALIFORNIA

REVISION	BY	APPROVED	DATE
UPDATE	KLR	DFC	03/2023

CITY OF ARCATA

ANCHOR BLOCKS

APPROVED BY:

N. B. KHATRI, R.C.E. #75428

DRAWING NUMBER W-16

REGISTERED PROFESSIONAL ENGINEER JONATHAN T. CAISSE No. C52062 CIVIL STATE OF CALIFORNIA

REGISTERED PROFESSIONAL ENGINEER NETRA KHATRI 75428 CIVIL STATE OF CALIFORNIA

City of ARCATA

Sheet Title: STANDARD DETAILS

Project Name: STEEL WATERLINE REPLACEMENT PROJECT

Project Address: VARIOUS LOCATIONS

Designed By: JONATHAN A. KIRCHUBEL

Drawn By: JONATHAN A. KIRCHUBEL

Checked By: DAVID CAISSE

Approved By: NETRA B. KHATRI

Date: JANUARY 2025

Sheet: C-502

Scale: N/A

Page: 27

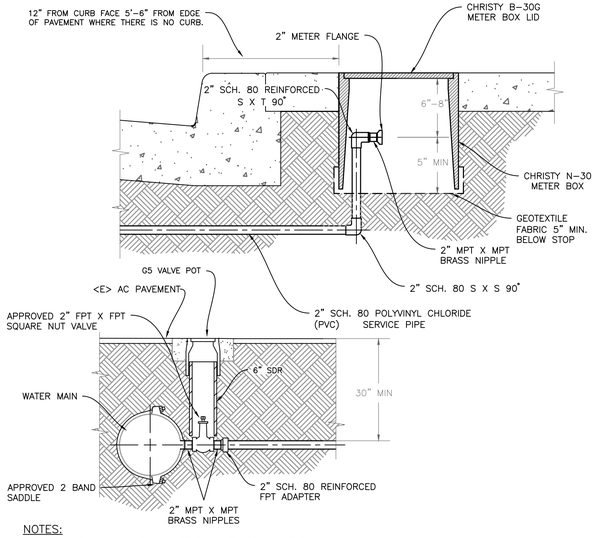

NOTES:

1. ALL MAINS SHALL HAVE SADDLES FOR SERVICE CONNECTIONS.
2. SADDLES SHALL BE 2" MINIMUM WIDTH.
3. SIZES INDICATED ARE MINIMUMS.
4. FOR SINGLE SERVICE USE CHRISTY N-30 BOX WITH B-30G COVER OR APPROVED EQUIV.
5. METER BOXES TO BE SET FLUSH WITH TOP OF CURB OR SIDEWALK, OR FINISHED GRADE.
6. PRIOR TO METER SET, ADDRESS TO BE CLEARLY MARKED ON TOPSIDE LIP OF METER BOX WITH PERMANENT FELT MARKER.
7. CONTACT CITY STAFF PRIOR TO MAKING ANY NEW CONNECTIONS.
8. INSPECTION OF FINISHED WORK REQUIRED. SCHEDULE INSPECTION A MINIMUM OF 48 HOURS IN ADVANCE.

REGISTERED PROFESSIONAL ENGINEER NETRA KHATRI 75428 CIVIL STATE OF CALIFORNIA

REVISION	BY	APPROVED	DATE
UPDATE	KLR	DFC	03/2023

CITY OF ARCATA

2-INCH SINGLE WATER METER SERVICE

APPROVED BY:

N. B. KHATRI, R.C.E. #75428

DRAWING NUMBER W-17

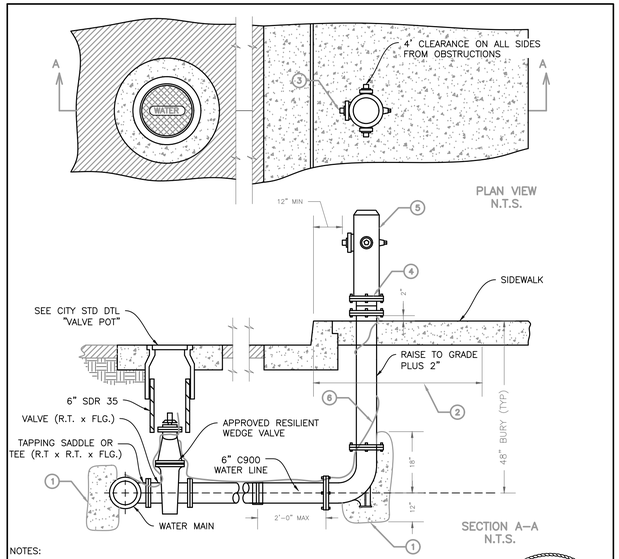

NOTES:

1. CONCRETE TRUST BLOCK PLACED AGAINST UNDISTURBED SOIL
2. WHERE NO SIDEWALK EXISTS OR WHERE F.H. IS INSTALLED IN PLANTER STRIP, A 4" THICK x 4' SQ. CONCRETE PAD SHALL BE INSTALLED
3. 4" OUTLET TO BE DIRECTED TOWARDS THE STREET
4. BREAK-OFF RISER WITH BREAK-OFF BOLTS
5. FIRE HYDRANT TO BE TRAFFIC YELLOW (REPAINT ONE COAT AFTER INSTALLATION.)
6. #10 INSULATED COPPER TRACER WIRE
7. RESIDENTIAL HYDRANT N.S.T. 2.5" & 4" (CLOW 950 OR APPROVED EQUAL)
8. COMMERCIAL HYDRANT N.S.T. 2.5" & 2.5" & 4" (CLOW 960 OR APPROVED EQUAL)
9. VERIFY FIRE PROTECTION REQUIREMENTS WITH THE FIRE DEPARTMENT
10. INSTALL 10' FROM DRIVEWAY
11. FURNISH ONE BLUE PAVEMENT MARKER 4" OFFSET CENTERLINE ON F.H. SIDE

REGISTERED PROFESSIONAL ENGINEER NETRA KHATRI 75428 CIVIL STATE OF CALIFORNIA

REVISION	BY	APPROVED	DATE
UPDATE	KLR	DFC	03/2023

CITY OF ARCATA

TYPICAL FIRE HYDRANT INSTALLATION

APPROVED BY:

N. B. KHATRI, R.C.E. #75428

DRAWING NUMBER W-40

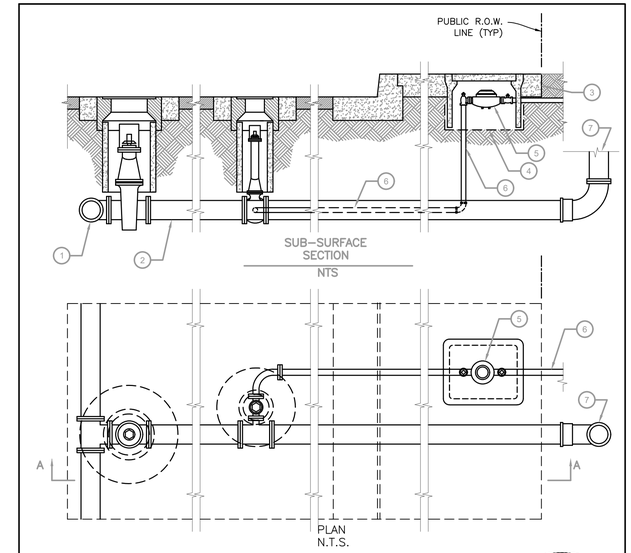

NOTES:

1. MAINLINE
2. SERVICE LINE
3. BACK OF SIDEWALK (TYP)
4. GEOTEXTILE FABRIC 5" MIN. BELOW CURB STOP
5. WATER METER
6. DOMESTIC WATER LINE
7. TO DETECTOR CHECK VALVE

REGISTERED PROFESSIONAL ENGINEER NETRA KHATRI 75428 CIVIL STATE OF CALIFORNIA

REVISION	BY	APPROVED	DATE
UPDATE	KLR	DFC	03/2023

CITY OF ARCATA

LOW HAZARD FIRE LINE INSTALLATION

APPROVED BY:

N. B. KHATRI, R.C.E. #75428

DRAWING NUMBER W-44

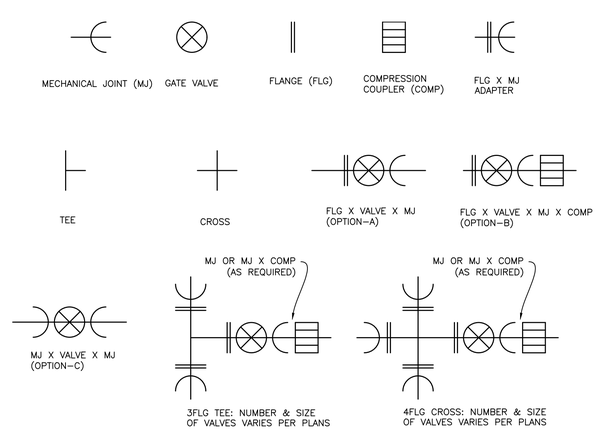

NOTES

1. BENDS AND CROSSES TO BE SIMILAR.
2. FITTINGS SHALL BE EITHER FLANGED OR MECHANICAL JOINT TYPE.
3. ALL CROSSES AND TEES SHALL BE DUCTILE IRON (AWWA C-110 OR C-153) CLASS 150.
4. COMPRESSION COUPLING TO BE APPROVED BY CITY ENGINEER.
5. ALL NUTS, BOLTS AND MISCELLANEOUS STEEL THAT ARE INSTALLED BELOW GROUND SHALL BE POLYETHYLENE ENCASED AS PER AWWA C-105 OR TAPE WRAPPED PER AWWA C-209, WITH A MIN THICKNESS OF 20 MILS IN EITHER CASE.
6. PVC STUBS SHALL BE 2' MIN LENGTH AND SHALL HAVE A CLASS AND PRESSURE RATING EQUAL TO, OR GREATER THAN, THE EXISTING WATER MAIN.

REGISTERED PROFESSIONAL ENGINEER NETRA KHATRI 75428 CIVIL STATE OF CALIFORNIA

REVISION	BY	APPROVED	DATE
UPDATE	KLR	DFC	03/2023

CITY OF ARCATA

TYPICAL FITTINGS & JOINTS

APPROVED BY:

N. B. KHATRI, R.C.E. #75428

DRAWING NUMBER W-50

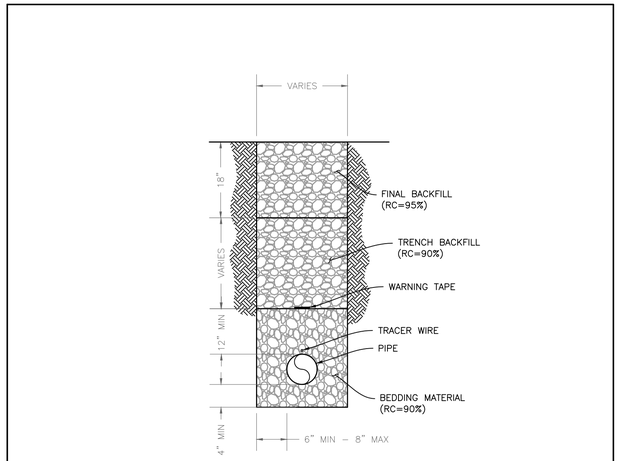

NOTES

1. FOR TRENCH RESURFACING IN IMPROVED STREETS REFER TO CITY STD DTL ST-30 FOR PAVEMENT INSTALLATION REQUIREMENTS.
2. WHERE COVER IS LESS THAN 30" SPECIAL DESIGN IS REQUIRED AND SHALL BE APPROVED BY CITY ENGINEER.
3. BEDDING MATERIAL SHALL CONFORM TO THE "GREENBOOK" STANDARD SPECIFICATIONS FOR PUBLIC WORKS CONSTRUCTION.
4. TRENCH BACKFILL MATERIAL SHALL CONFORM TO THE "GREENBOOK" STANDARD SPECIFICATIONS FOR PUBLIC WORKS CONSTRUCTION.
5. WARNING TAPE TO BE INSTALLED 12" ABOVE PIPE.
6. DESIGN SHALL CONFORM TO THESE REQUIREMENTS EXCEPT AS OTHERWISE APPROVED BY THE CITY ENGINEER.
7. RETROFIT MAY ADJUST TO MATCH FIELD CONDITIONS IF APPROVED BY ENGINEER.
8. INSPECTION OF FORMS AND FINISHED WORK REQUIRED. SCHEDULE INSPECTION A MINIMUM OF 24 HOURS IN ADVANCE.
9. BACKFILL AND BEDDING WILL NOT BE PEA GRAVEL.

REGISTERED PROFESSIONAL ENGINEER NETRA KHATRI 75428 CIVIL STATE OF CALIFORNIA

REVISION	BY	APPROVED	DATE
UPDATE	KLR	DFC	04/2023

CITY OF ARCATA

TRENCH BACKFILL

APPROVED BY:

N. B. KHATRI, R.C.E. #75428

DRAWING NUMBER G-02

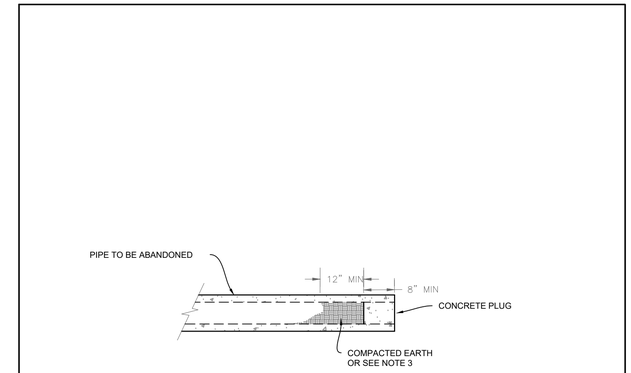

NOTES:

1. PIPE PLUGS SHALL BE INSTALLED TO THE SATISFACTION OF THE DIRECTOR OF PUBLIC WORKS.
2. ABANDONED PIPES, 12" AND LARGER, SHALL BE BROKEN INTO EVERY 50' AND SHALL BE FILLED COMPLETELY WITH SAND SLURRY.
3. SHALL BE INSPECTED BY THE ENGINEERING DEPARTMENT BEFORE COVERING.

REGISTERED PROFESSIONAL ENGINEER NETRA KHATRI 75428 CIVIL STATE OF CALIFORNIA

REVISION	BY	APPROVED	DATE
UPDATE	MA	DFC	04/2023

CITY OF ARCATA

ABANDONED PIPE/LATERAL "PLUG" DETAIL

APPROVED BY:

N. B. KHATRI, R.C.E. #75428

DRAWING NUMBER SS-14

REGISTERED PROFESSIONAL ENGINEER DAVID T. CAISSE No. C50662 CIVIL STATE OF CALIFORNIA

REGISTERED PROFESSIONAL ENGINEER NETRA KHATRI 75428 CIVIL STATE OF CALIFORNIA

City of ARCATA

Sheet Title: STANDARD DETAILS

Project Name: STEEL WATERLINE REPLACEMENT PROJECT

Project Address: VARIOUS LOCATIONS

Designed By: JONATHAN A. KIRCHUBEL

Drawn By: JONATHAN A. KIRCHUBEL

Checked By: DAVID CAISSE

Approved By: NETRA B. KHATRI

Date: JANUARY 2025

Sheet: C-503

Scale: N/A

Page: 28

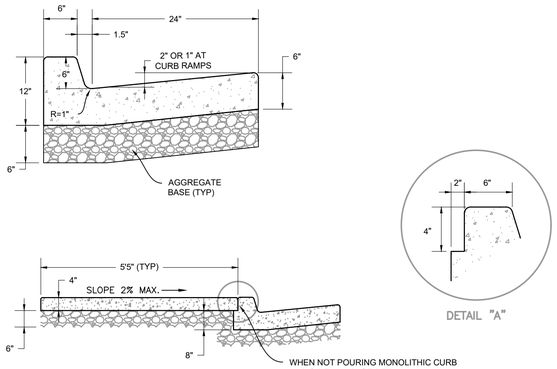

NOTES:
1. SEE CITY STD DTL "WEAKENED PLANE JOINTS" FOR LOCATION OF WEAKENED PLANES AND JOINTS.
2. DESIGN SHALL CONFORM TO THESE REQUIREMENTS EXCEPT AS OTHERWISE APPROVED BY THE CITY ENGINEER.
3. ALL CONCRETE SHALL BE 520–C–2500 AS PER THE "GREENBOOK" STANDARD SPECIFICATIONS FOR PUBLIC WORKS CONSTRUCTION.
4. ALL ROUNDED CORNERS TO BE ½" RADIUS UNLESS OTHERWISE SPECIFIED.
5. AGGREGATE BASE MATERIAL SHALL BE CALTRANS CLASS 2, MAX ¾" AGGREGATE BASE, COMPACTED TO 95% RELATIVE COMPACTION.
6. WHEN NEW SIDEWALK ABUTS EXISTING SIDEWALK DOWELS SHALL BE USED TO PREVENT UNEVEN SETTLING: USE 12" OF #3 REBAR AT 12" O.C.
7. BACK OF WALK TO ALIGN WITH PUBLIC RIGHT–OF–WAY LINE UNLESS OTHERWISE APPROVED BY CITY ENGINEER.
8. WIDTH OF SIDEWALK MAY VARY AND SHALL BE APPROVED BY CITY ENGINEER.
9. RETROFIT MAY ADJUST TO MATCH FIELD CONDITIONS IF APPROVED BY CITY ENGINEER.
10. INSPECTION OF FORMS AND FINISHED WORK REQUIRED. SCHEDULE INSPECTION A MINIMUM OF 48 HOURS IN ADVANCE.
11. ALL CONCRETE SHALL CONTAIN 3 LBS OF LAMP BLACK PER CUBIC YARD.

REGISTERED PROFESSIONAL ENGINEER NETRA KHATRI 75428 CIVIL STATE OF CALIFORNIA

REVISION	BY	APPROVED	DATE		
(ORIGINAL)	TWB	RCC	06/2005	CITY OF ARCATA	APPROVED BY:
UPDATE	DR	DFC	03/2023	A2 CURB & GUTTER W/ SIDEWALK	N. B. KHATRI, R.C.E. #75428
					DRAWING NUMBER ST–02

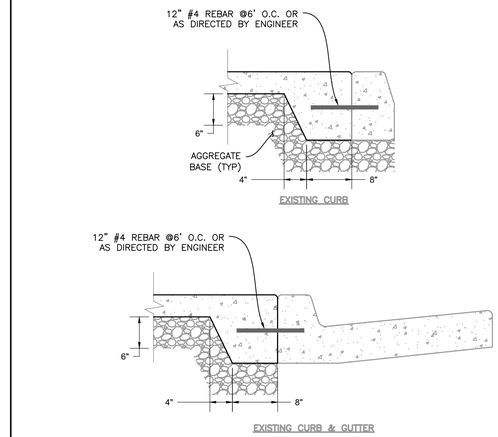

NOTES:
1. SEE CITY STANDARD DETAILS FOR SIDEWALK, CURB, AND GUTTER DESIGN AND INSTALLATION REQUIREMENTS AS NEEDED.
2. DESIGN SHALL CONFORM TO THESE REQUIREMENTS EXCEPT AS OTHERWISE APPROVED BY THE CITY ENGINEER.
3. ALL CONCRETE SHALL BE 520–C–2500 AS PER THE "GREENBOOK" STANDARD SPECIFICATIONS FOR PUBLIC WORKS CONSTRUCTION.
4. ALL ROUNDED CORNERS TO BE ½" RADIUS UNLESS OTHERWISE SPECIFIED.
5. AGGREGATE BASE MATERIAL SHALL BE CALTRANS CLASS 2, MAX ¾" AGGREGATE BASE, COMPACTED TO 95% RELATIVE COMPACTION.
6. RETROFIT MAY ADJUST TO MATCH FIELD CONDITIONS IF APPROVED BY CITY ENGINEER.
7. INSPECTION OF FORMS AND FINISHED WORK REQUIRED. SCHEDULE INSPECTION A MINIMUM OF 48 HOURS IN ADVANCE.
8. ALL CONCRETE SHALL INCLUDE 3 LBS OF LAMP BLACK PER CUBIC YARD.

REGISTERED PROFESSIONAL ENGINEER NETRA KHATRI 75428 CIVIL STATE OF CALIFORNIA

REVISION	BY	APPROVED	DATE		
(ORIGINAL)	TWB	RCC	06/2005	CITY OF ARCATA	APPROVED BY:
UPDATE	DR	DFC	03/2023	SIDEWALK INFILL W/ EXISTING CURB & GUTTER	N. B. KHATRI, R.C.E. #75428
					DRAWING NUMBER ST–08

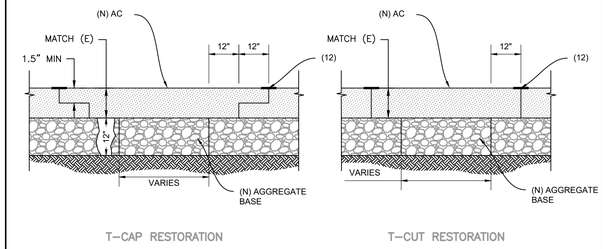

NOTES
1. DESIGN SHALL CONFORM TO THESE REQUIREMENTS EXCEPT AS OTHERWISE APPROVED BY THE CITY ENGINEER.
2. T–CAP RESTORATION REQUIRED IN CITY STREETS THAT ARE CLASSIFIED BY THE CITY AS: FREEWAYS/HIGHWAYS, ARTERIALS, MINOR ARTERIALS, OR COLLECTORS.
3. FOR STREETS THAT HAVE BEEN PAVED AND/OR SLURRIED DURING THE LAST 5 YEARS THE CONTRACTOR SHALL PAVE TO WIDTH AND/OR LIMITS AS DIRECTED BY CITY ENGINEER.
   3.1. PAVING WIDTH SHALL BE 5' MINIMUM IF TRENCH IS PARALLEL TO DIRECTION OF TRAVEL. IF TRENCH SEAM FALLS WITHIN 2 FEET OF WHEEL PATH THEN EXTEND THE WIDTH OF PAVING BY 2' MINIMUM.
   3.2. PAVING WIDTH SHALL BE 6' MINIMUM IF TRENCH IS PERPENDICULAR TO DIRECTION OF TRAVEL. IF TRENCH SEAM FALLS WITHIN 2 FEET OF WHEEL PATH THEN EXTEND THE WIDTH OF PAVING BY 2' MINIMUM.
   3.3. ANY RESTORATION WORK RESULTING IN PONDING IN EXCESS OF ½" SHALL BE REMOVED & REPLACED.
   3.4. PAVING OF TRENCH SHALL NOT EXCEED MORE THAN ¼" HEIGHT DIFFERENTIAL AS COMPARED TO THE EXISTING PAVEMENT.
4. AGGREGATE BASE MATERIAL SHALL BE CALTRANS CLASS 2 MAX ¾" AGGREGATE BASE, COMPACTED TO 95% RELATIVE COMPACTION.
5. ASPHALT SHALL BE ½" TYPE–A HMA AS PER SECTION 39 OF THE CALTRANS STANDARD SPECIFICATIONS, OR AS APPROVED BY CITY ENGINEER, AND SHALL BE INSTALLED IN 2 LIFTS MINIMUM (TYP).
6. VERTICAL EDGES OF AC SHALL BE SWEPT CLEAN AND BINDER SHALL BE APPLIED PRIOR TO PAVING.
7. ASPHALT THICKNESS TO MATCH EXISTING, BUT SHALL BE NO LESS THAN 3 INCHES.
8. BASE THICKNESS TO MATCH EXISTING, BUT SHALL BE NO LESS THAN 12".
9. PAVEMENT REMOVAL SHALL EMPLOY SAW CUTTING OR GRINDING.
10. RETROFIT MAY ADJUST TO MATCH FIELD CONDITIONS IF APPROVED BY CITY ENGINEER.
11. INSPECTION OF FINISHED WORK REQUIRED. SCHEDULE INSPECTION A MINIMUM OF 48 HOURS IN ADVANCE.
12. ALL JOINTS SHALL BE SEALED WITH A 6" WIDE STRIP OF EMULSIFIED ASPHALT (SS–1H) AND COVERED WITH 30–60 MESH FINE KLEEN BLAST.

REGISTERED PROFESSIONAL ENGINEER NETRA KHATRI 75428 CIVIL STATE OF CALIFORNIA

REVISION	BY	APPROVED	DATE		
(ORIGINAL)	JEE	SRB	01/2001	CITY OF ARCATA	APPROVED BY:
REVISED	MA	DFC	03/2023	PAVEMENT RESTORATION	N. B. KHATRI, R.C.E. #75428
					DRAWING NUMBER ST–30

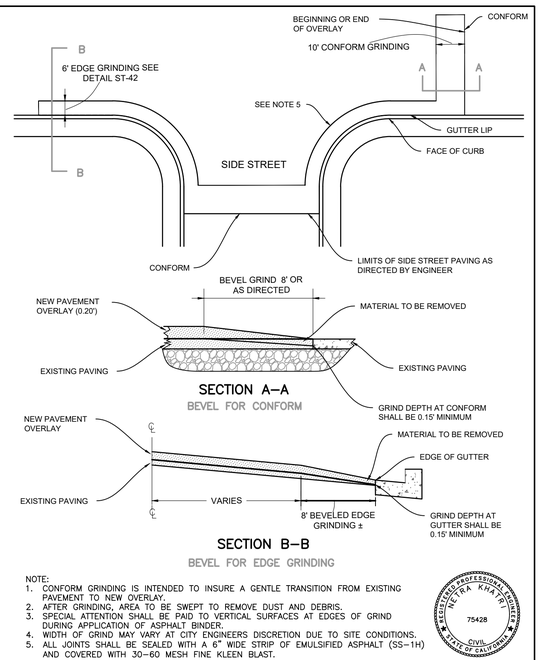

NOTE:
1. CONFORM GRINDING IS INTENDED TO INSURE A GENTLE TRANSITION FROM EXISTING PAVEMENT TO NEW OVERLAY.
2. AFTER GRINDING, AREA TO BE SWEPT TO REMOVE DUST AND DEBRIS.
3. SPECIAL ATTENTION SHALL BE PAID TO VERTICAL SURFACES AT EDGES OF GRIND DURING APPLICATION OF ASPHALT BINDER.
4. WIDTH OF GRIND MAY VARY AT CITY ENGINEERS DISCRETION DUE TO SITE CONDITIONS.
5. ALL JOINTS SHALL BE SEALED WITH A 6" WIDE STRIP OF EMULSIFIED ASPHALT (SS–1H) AND COVERED WITH 30–60 MESH FINE KLEEN BLAST.

REGISTERED PROFESSIONAL ENGINEER NETRA KHATRI 75428 CIVIL STATE OF CALIFORNIA

REVISION	BY	APPROVED	DATE		
UPDATE	DR	DFC	03/2023	CITY OF ARCATA	APPROVED BY:
				BEVEL FOR EDGE AND CONFORM GRINDING	N. B. KHATRI, R.C.E. #75428
					DRAWING NUMBER ST–41

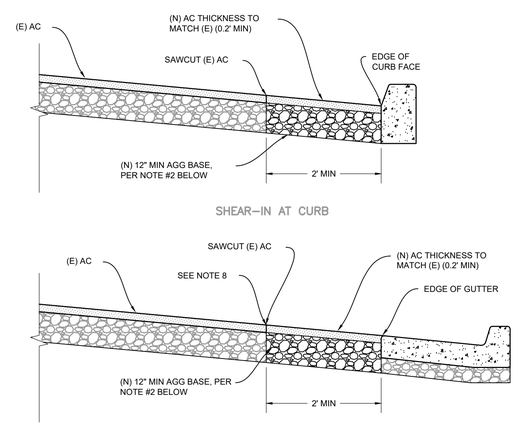

NOTES:
1. DESIGN SHALL CONFORM TO THESE REQUIREMENTS EXCEPT AS OTHERWISE APPROVED BY THE CITY ENGINEER.
2. AGGREGATE BASE MATERIAL SHALL BE CALTRANS CLASS 2, MAX ¾" AGGREGATE BASE, COMPACTED TO 95% RELATIVE COMPACTION.
3. ASPHALT SHALL BE ½" TYPE–A HMA AS PER SECTION 39 OF THE CALTRANS STANDARD SPECIFICATIONS.
4. VERTICAL EDGES OF AC SHALL BE SWEPT CLEAN AND BINDER SHALL BE APPLIED PRIOR TO PAVING.
5. SHEAR–IN WIDTH MAY BE ALTERED BY CITY ENGINEER.
6. RETROFIT MAY ADJUST TO MATCH FIELD CONDITIONS IF APPROVED BY ENGINEER.
7. INSPECTION OF FINISHED WORK REQUIRED. SCHEDULE INSPECTION A MINIMUM OF 24 HOURS IN ADVANCE.
8 ALL JOINTS SHALL BE SEALED WITH A 6" WIDE STRIP OF EMULSIFIED ASPHALT (SS–1H) AND COVERED WITH 30–60 MESH FINE KLEEN BLAST.

REGISTERED PROFESSIONAL ENGINEER NETRA KHATRI 75428 CIVIL STATE OF CALIFORNIA

REVISION	BY	APPROVED	DATE		
UPDATE	DR	DFC	03/2023	CITY OF ARCATA	APPROVED BY:
				ASPHALT SHEAR–IN	N. B. KHATRI, R.C.E. #75428
					DRAWING NUMBER ST–44

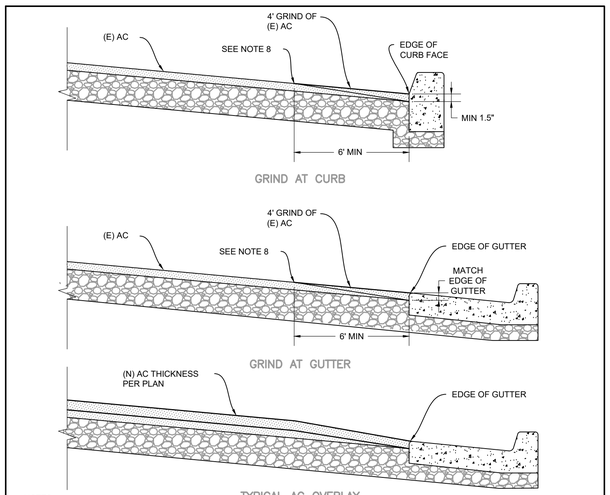

NOTES:
1. DESIGN SHALL CONFORM TO THESE REQUIREMENTS EXCEPT AS OTHERWISE APPROVED BY THE CITY ENGINEER.
2. AGGREGATE BASE MATERIAL SHALL BE CALTRANS CLASS 2, MAX ¾" AGGREGATE BASE, COMPACTED TO 95% RELATIVE COMPACTION.
3. ASPHALT SHALL BE ½" TYPE–A HMA AS PER SECTION 39 OF THE CALTRANS STANDARD SPECIFICATIONS.
4. VERTICAL EDGES OF AC SHALL BE SWEPT CLEAN AND BINDER SHALL BE APPLIED PRIOR TO PAVING.
5. SHEAR–IN WIDTH MAY BE ALTERED BY CITY ENGINEER.
6. RETROFIT MAY BE ADJUSTED TO MATCH FIELD CONDITIONS IF APPROVED BY ENGINEER.
7. INSPECTION OF FINISHED WORK REQUIRED. SCHEDULE INSPECTION A MINIMUM OF 24 HOURS IN ADVANCE.
8. ALL JOINTS SHALL BE SEALED WITH A 6" WIDE STRIP OF EMULSIFIED ASPHALT (SS–1H) AND COVERED WITH 30–60 MESH FINE KLEEN BLAST.

REGISTERED PROFESSIONAL ENGINEER NETRA KHATRI 75428 CIVIL STATE OF CALIFORNIA

REVISION	BY	APPROVED	DATE		
UPDATE	KLR	DFC	03/2023	CITY OF ARCATA	APPROVED BY:
				GRIND OUT (EDGE CONFORM)	N. B. KHATRI, R.C.E. #75428
					DRAWING NUMBER ST–45

REGISTERED PROFESSIONAL ENGINEER JONATHAN A. KIRCHUBEL No. C82062 CIVIL STATE OF CALIFORNIA

REGISTERED PROFESSIONAL ENGINEER NETRA KHATRI 75428 CIVIL STATE OF CALIFORNIA

City of ARCATA

Sheet Title: STANDARD DETAILS

Project Name: STEEL WATERLINE REPLACEMENT PROJECT

Project Address: VARIOUS LOCATIONS

Designed By	JONATHAN A. KIRCHUBEL
Drawn By	JONATHAN A. KIRCHUBEL
Checked By	DAVID CAISSE
Approved By	NETRA B. KHATRI
Date	JANUARY 2025
Sheet	C–504
Scale	N/A
Page	29

DETAIL FOR PRESSURE REDUCING VALVE VAULT ON SHIRLEY BLVD

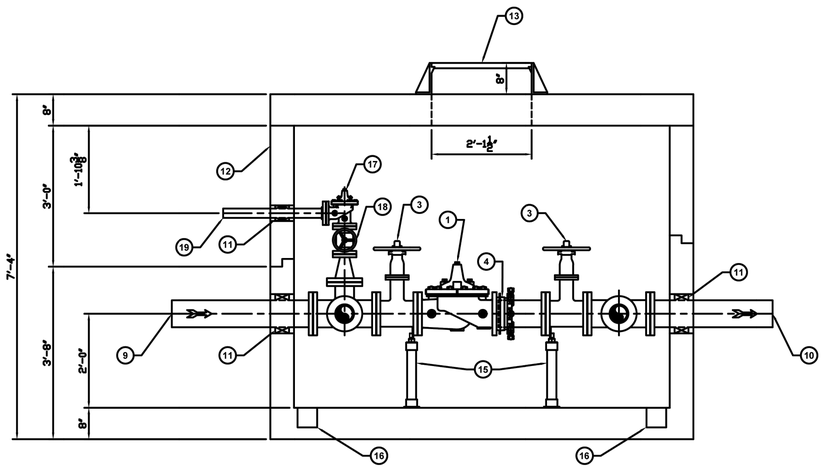

SECTION A-A

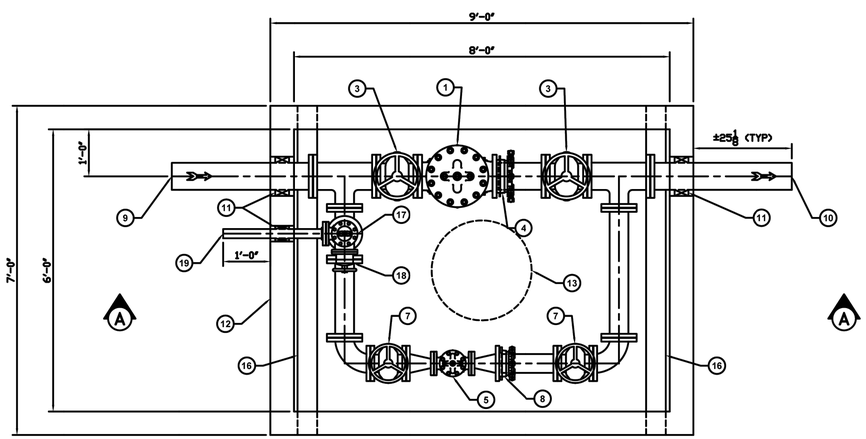

PLAN VIEW

BILL OF MATERIALS		
ITEM	QTY	DESCRIPTION
1	1	6" CLA-VAL 90 SERIES PRESSURE REDUCING VALVE
2		NOT USED
3	2	6" NRS GATE VALVE (OPEN LEFT)
4	1	6" RESTRAINED FLANGE ADAPTER
5	1	2" CLA-VAL 90 SERIES PRESSURE REDUCING VALVE
6	1	NOT USED
7	2	4" NRS GATE VALVE (OPEN LEFT)
8	1	4" RESTRAINED FLANGE ADAPTER
9	1	6" DUCTILE IRON PIPE INLET
10	1	6" DUCTILE IRON PIPE OUTLET
11	3	PIPE PENETRATION SEAL
12	1	PRECAST CONCRETE VAULT
13	1	MANHOLE COVER AND FRAME
14		NO USED
15	4	PIPE SUPPORTS
16	2	TRENCH DRAIN WITH GRATING AND 4" FEMALE SOCKET CONNECTION ON THE EXTERIOR OF BOTH SIDES
17	1	2" CLA-VAL MODEL 50-01 PRESSURE RELIEF VALVE
18	1	2" NRS GATE VALVE (OPEN LEFT)
19	1	2" STAINLESS STEEL PIPE RELIEF OUTLET

NOTES: FITTINGS ARE DUCTILE IRON IN ACCORDANCE WITH ANSI/AWWA C110/A21.10. FLANGES ARE ANSI CLASS 125, B16.1.

PIPE SPOOLS ARE CL53 DUCTILE IRON WITH FLANGES IN ACCORDANCE WITH ANSI/AWWA C115/A21.15. FLANGES ARE ANSI CLASS 125, B16.1.

2" AND SMALLER PIPE/FITTINGS ARE STAINLESS STEEL.

INTERIOR COATING MEETS THE REQUIREMENT OF NSF-61 STANDARD.

EXTERIOR COATING TO BE A 2-PART EPOXY.

THE VAULT WILL BE DELIVERED IN THREE (3) SECTIONS. OFF-LOADING AND SETTING OF EACH SECTION BY INSTALLING CONTRACTOR, NOT ESI FAB SYSTEMS. THE HEAVIEST LIFT WILL BE APPROXIMATELY 15,000 POUNDS.

JOINT SEALANT WILL BE SUPPLIED FOR INSTALLATION BY CONTRACTOR BETWEEN THE THREE (3) SECTIONS.

ESI FAB SYSTEMS
15410 S MAHAFFIE ST
OLATHE, KS 66062
PH: 816-468-9119 - www.esiwater.com

EPS07573 - REV: 1

PROJECT:
CITY OF ARCATA

REGISTERED PROFESSIONAL ENGINEER JONATHAN A. KIRCHUBEL No. C80962 CIVIL STATE OF CALIFORNIA

REGISTERED PROFESSIONAL ENGINEER NETRA KHATRI 75428 CIVIL STATE OF CALIFORNIA

City of ARCATA

Sheet Title: STANDARD DETAILS

Project Name: STEEL WATERLINE REPLACEMENT PROJECT

Project Address: VARIOUS LOCATIONS

Designed By: JONATHAN A. KIRCHUBEL
Drawn By: JONATHAN A. KIRCHUBEL
Checked By: DAVID CAISSE
Approved By: NETRA B. KHATRI

Date: JANUARY 2025
Sheet: C-505
Scale: N/A
Page: 30

STANDARD DETAILS ADDED THROUGH ADDENDA

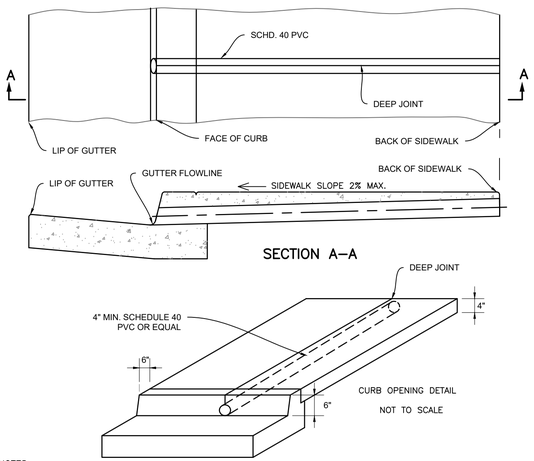

NOTES:
1. ON SITE DRAINAGE AND LOCATION OF CURB OUTLETS SHALL BE BY OWNER AS APPROVED BY THE CITY ENGINEER.
2. DRAIN PIPE SHALL BE INSTALLED SO THAT TOP OF PIPE IS 2" MINIMUM BELOW TOP OF SIDEWALK.
3. SIDEWALK DRAIN TO BE 4" OR LARGER SCHEDULE 40 RIGID POLYVINYL CHLORIDE PIPE OR APPROVED EQUAL.
4. DEEP JOINTS TO BE PLACED OVER FULL LENGTH OF PIPE TO GUTTER. TO BE APPROVED BY THE CITY ENGINEER.
5. SMOOTH FACE OF GUTTER AT PIPE SHALL BE MAINTAINED WITH NO GAPS.

REGISTERED PROFESSIONAL ENGINEER NETRA KHATRI 75428 CIVIL STATE OF CALIFORNIA

REVISION	BY	APPROVED	DATE
UPDATE	DR	DFC	04/2023

CITY OF ARCATA

THRU SIDEWALK PIPE DRAIN

APPROVED BY:

N. B. KHATRI, R.C.E. #75428

DRAWING NUMBER D–11

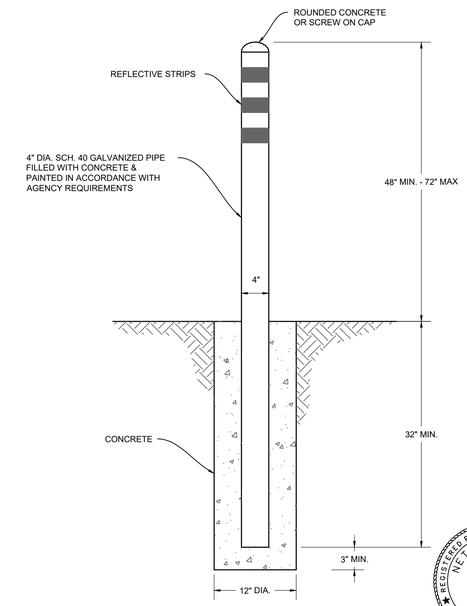

REGISTERED PROFESSIONAL ENGINEER NETRA KHATRI 75428 CIVIL STATE OF CALIFORNIA

REVISION	BY	APPROVED	DATE
UPDATE	DR	DFC	03/2023

CITY OF ARCATA

PROTECTION POST

APPROVED BY:

N. B. KHATRI, R.C.E. #75428

DRAWING NUMBER ST–33

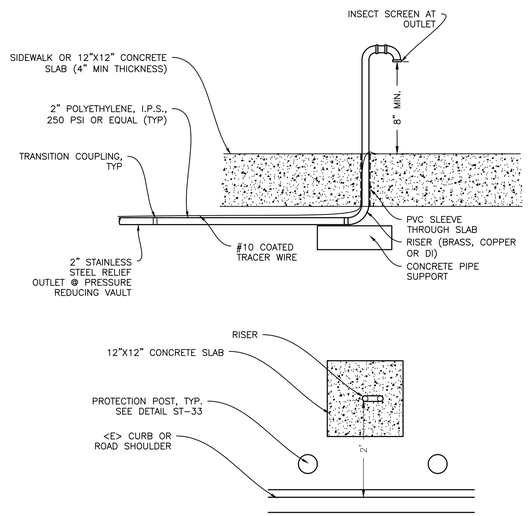

REVISION	BY	APPROVED	DATE
UPDATE	SL	DFC	03/2025

CITY OF ARCATA

PRESSURE REDUCING VAULT RELIEF OUTLET

APPROVED BY:

N. B. KHATRI, R.C.E. #75428

DRAWING NUMBER

REGISTERED PROFESSIONAL ENGINEER DAVID F. CAISSE No. C80962 CIVIL STATE OF CALIFORNIA

REGISTERED PROFESSIONAL ENGINEER NETRA KHATRI 75428 CIVIL STATE OF CALIFORNIA

City of ARCATA

Sheet Title: STANDARD DETAILS

Project Name: STEEL WATERLINE REPLACEMENT PROJECT

Project Address: VARIOUS LOCATIONS

Designed By: JONATHAN A. KIRCHUBEL

Drawn By: JONATHAN A. KIRCHUBEL

Checked By: DAVID CAISSE

Approved By: NETRA B. KHATRI

Date: JANUARY 2025

Sheet: C–505

Scale: N/A

Page: 30